THIS DRAWING IS UNPUBLISHED. RELEASED FOR PUBLICATION 20
© COPYRIGHT 20 BY - ALL RIGHTS RESERVED.

REVISIONS

P	LTR	DESCRIPTION	DATE	DWN	APVD
	A	INITIAL RELEASE	02MAR2016	N.P	X.X
	A1	PER ECR-16-010253	21JUL2016	N.P	X.X
	A2	PER ECR-16-016206	16NOV2016	G.W	C.W

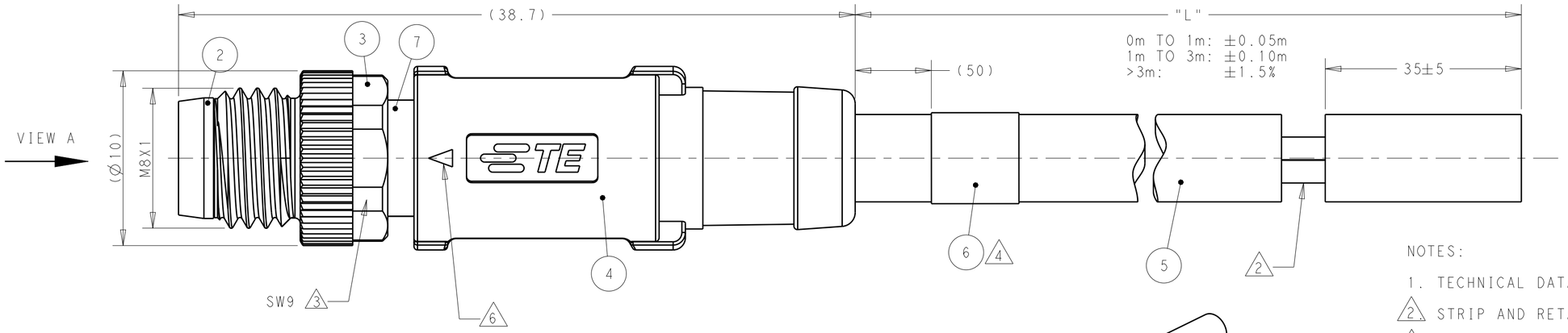

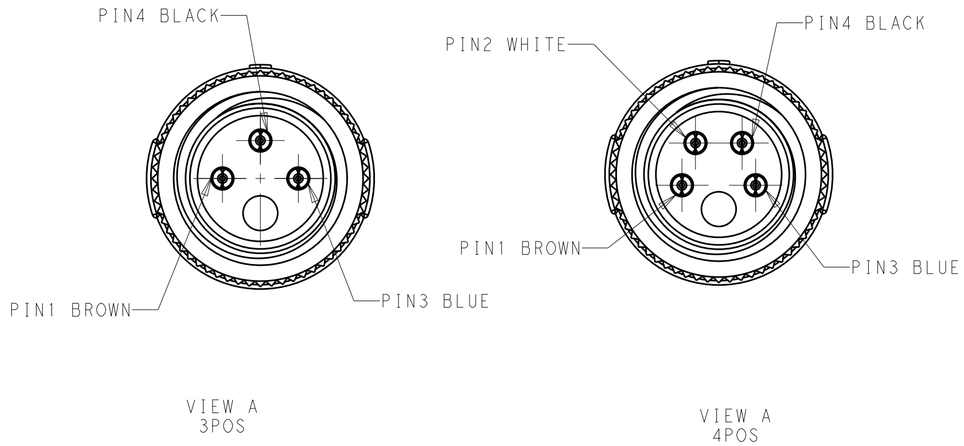

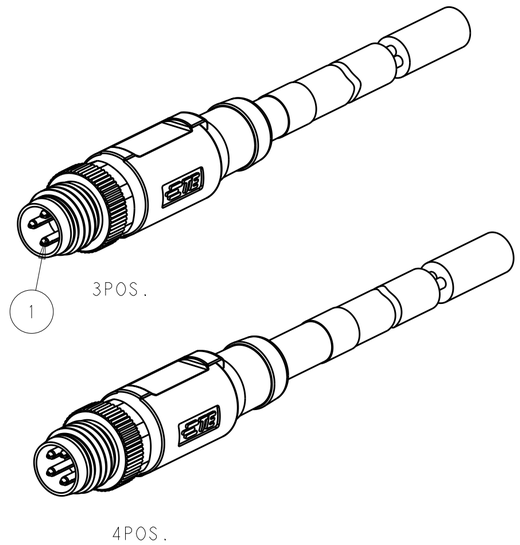

NOTES:

1. TECHNICAL DATA: SEE TABLE 1
2. STRIP AND RETAIN THE INSULATION
3. RECOMMEND TORQUE 0.4Nm
4. TE LABLE AREA.
5. -**: CABLE LENGHT.-0.5:0.5m, -1.0:1.0m, -1.5:1.5m...
6. INSERT MARK FOR MATING.
7. ALL PRODUCT MUST COMPLIANCE WITH ROHS AND REACH.
8. -00X:FOR CABLE LENGTH, SEE TABLE 2 AND REFER TO LENGTH "L"

注意事项

1. 技术参数；见表1
2. 剥线并保留绝缘层；
3. 推荐扭矩0.4Nm；
4. TE 标签位置；
5. -**线长：-0.5:0.5m，-1.0:1.0m，-1.5:1.5m
6. 产品对插标示；
7. 产品必须符合ROHS与REACH.
8. -00X：线缆长度，参考表2，参照长度"L"

CABLE CHARACTERISTIC	LENGTH "L"	CABLE TEMP. RANGE	JACKET COLOR	JACKET MATERIAL	TYPE	POS.	TABLE 2 PART NUMBER
WIRES: 0.34mm2 (22AWG)	STANDARD: -001: 0.5m -002: 1.0m -003: 1.5m -004: 3.0m -005: 5.0m -006: 7.0m -007: 10.0m CUSTOMIZATION: -**0: 00.0m -001: **.5m	FIXED: -40°C~80°C FLXIBLE: -25°C~80°C	GRAY	PUR (UL)	RPC-M8-MS-4CON-PUR-**SHS0.34 5	4	T4061140004-00X 8
					RPC-M8-MS-3CON-PUR-**SHS0.34 5	3	T4061140003-00X 8
		FIXED: -10°C~80°C FLXIBLE: -5°C~80°C	BLACK	PVC (UL)	RPC-M8-MS-4CON-PVC-**SHS0.34 5	4	T4061130004-00X 8
					RPC-M8-MS-3CON-PVC-**SHS0.34 5	3	T4061130003-00X 8
WIRES: 0.25mm2 (24AWG)		FIXED: -40°C~80°C FLXIBLE: -25°C~80°C	GRAY	PUR (UL)	RPC-M8-MS-4CON-PUR-**SH 5	4	T4061120004-00X 8
					RPC-M8-MS-3CON-PUR-**SH 5	3	T4061120003-00X 8
		FIXED: -10°C~80°C FLXIBLE: -5°C~80°C	BLACK	PVC (UL)	RPC-M8-MS-4CON-PVC-**SH 5	4	T4061110004-00X 8
					RPC-M8-MS-3CON-PVC-**SH 5	3	T4061110003-00X 8

TABLE 1

TECHNICAL DATA	T40611X0003-00X	T40611X0004-00X
RATED VOLTAGE	60V	30V
RATED CURRENT	3A	
POLLETION DEGREE	3	
OVERVOLTAGE CATEGORY	II	
MATERIAL GROUP	II	
DEGREE OF PROTECTION	IP67	

	MATERIAL	DESCRIPITON	ITEM
	COPPER ALOY	SHIELDING	7
-	-	TE LABLE	6
-	-	CABLE	5
BLUE COLOR	POLYURETHANE	OVER-MOLDING	4
-	COPPER ALLOY	COUPLING NUT	3
BALCK COLOR	PA66	HOUSING	2
GOLD FLASH	COPPER ALLOY	CONTACT	1
COMMENTS			

THIS DRAWING IS A CONTROLLED DOCUMENT.

DIMENSIONS: mm

TOLERANCES UNLESS OTHERWISE SPECIFIED:
0 PLC ±-
1 PLC ±0.50
2 PLC ±0.35
3 PLC ±
4 PLC ±
ANGLES ±-

MATERIAL -
FINISH -

DWN Nick Pan 21JAN2016
CHK Kobby Zhao 21JAN2016
APVD Xiang Xu 21JAN2016
PRODUCT SPEC 108-106140
APPLICATION SPEC -
WEIGHT -

TE Connectivity

NAME M8 CABLE ASSEMBLY MALE SIDE SINGLE ENDED, SHIELDED TYPE
-

SIZE	CAGE CODE	DRAWING NO	RESTRICTED TO
A2	-	C-T40611X000X00X	-

CUSTOMER DRAWING | SCALE 1:1 | SHEET 1 OF 1 | REV A2

1471-9 (3/13)