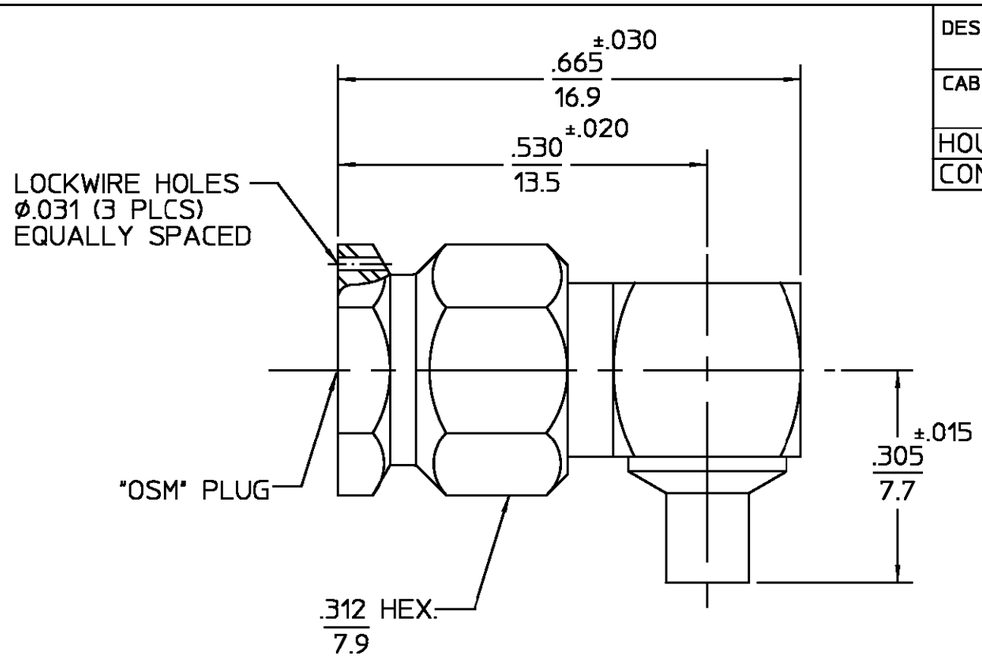

DESIGNED FOR USE WITH .085 S.R.	
CABLE ENTRY DIAMETER MINIMUM	
HOUSING	.088
CONTACT	.037

REVISIONS

REV	DESCRIPTION	DATE	APPROVED
01_1	REVISED	9/13/96	

COMPONENT	MATERIAL	FINISH
HOUSING EXTRA HOUSING CAP	STAINLESS STEEL PER ASTM-A484 AND ASTM-A582, TYPE 303	GOLD PLATE PER MIL-G-45204
COUPLING NUT	STAINLESS STEEL PER ASTM-A484 AND ASTM-A582, TYPE 303	PASSIVATE PER QQ-P-35
DIELECTRIC	TFE FLUOROCARBON PER ASTM-D-1457	N/A
CENTER CONTACT	BERYLLIUM COPPER PER ASTM-B-196 OR ASTM-B-197, ALLOY C17300, CONDITION H	GOLD PLATE PER MIL-G-45204
RETAINING RING	BERYLLIUM COPPER PER ASTM-B-194, ALLOY C17200, CONDITION H	N/A
GASKET	SILICONE RUBBER PER ZZ-R-765	N/A

ELECTRICAL	MECHANICAL	ENVIRONMENTAL
Nominal Impedance (Ohms) 50	Interface Dimensions MIL-STD-348A, Fig. 310-1	Temperature Rating -65°C to 165°C
Frequency Range (GHz) DC to 12.4	Recommended Mating Torque 7 to 10 In-Lbs	Vibration MIL-STD-202, Method 204, Condition D
Volt Rating (VRMS MAX) @ Sea Level 335	Mating Characteristics: Insertion (MAX Lbs) N/A	Shock MIL-STD-202, Method 213, Condition I
VSWR 1.10 +0.01 f(GHz)	Withdrawal (MIN Oz) N/A	Thermal Shock MIL-STD-202, Method 107, Condition B, Except High Temp +115°C
Insertion Loss (dB MAX) .05 x$\sqrt{f(GHz)}$	Force to Engage and Disengage (In-Lbs MAX) 2.0	Moisture Resistance MIL-STD-202, Method 106
RF Leakage (dB MIN) -90 @2 to 3 GHz	Center Contact Captivation Axial (Lbs) 6.0	Corrosion - MIL-STD-202, Method 101, Condition B, 5% salt spray
Corona, 70,000 Ft (VRMS MIN) 250	Radial (In-Oz) 4.0	
Dielectric Withstanding Voltage (VRMS MIN) @ Sea Level 1,000	Cable Retention Axial Force (LXs) 30	.XXX = in
Contact Resistance (Milliohms MAX) Center Contact 4.0	Torque (In-Oz) 16	XX.X = mm (REF)
Outer Contact 2.0	Weight (Grams) TBD	
Cable to Housing 0.5		
RF High Potential @ Sea Level (VRMS MIN @ 5 MHz) 670		
I.R.(Megohms MIN) 5,000		

UNLESS OTHERWISE SPECIFIED DIMENSIONS ARE IN INCHES

FRAC.	DEC.	ANGLES
± 1/64	±.005	± 1°

		DATE
DRAWN BY	JM	11/8/85
CHECKED BY	RG	11/12/85
APP'D BY	RG	11/12/85

AMP

AMP Incorporated
140 Fourth Avenue
Waltham, MA 02451-7599

These drawings and specifications are the property of M/A COM Interconnect Div. and shall not be reproduced or copied or used in whole or in part as the basis for the manufacture or sale o f item(s) without written permission.

USE ASS'Y PROCEDURE

NO. A.P. 408-04844 (20-562)

TITLE "OSM" RIGHT ANGLE CABLE PLUG DIRECT SOLDER ATTACHMENT M39012/80-3007 CAT E

SIZE	CODE IDENT NO.		REV
B	26805	2007-8007-92	01_1
SCALE 5:1			SHEET 1 OF 1

COPY IN PUERTO RICO

CUSTOMER DRAWING

AMP PART # 1051168-1
SHEET 1 OF 1 REV A