	REVISION DESCRIPTION	APP.	DRW.	DATE	CHANGE No.
D X 3	HSG design change	K. Abe	O. Shimizu	13/10/22	———
C X 10	Change reinforcement terminal	T. Nishimura	H. Takahira	15/06/16	DC15-0032
B X 4	HSG design change	T. Nishimura	H. Takahira	15/09/18	DC15-0060

Pin count	Lp	L1	L2	P/N
50	24.5	30.4	23.4	CNU018S-050-0011
32	15.5	21.4	14.4	CNU018S-032-0011
24	11.5	17.4	10.4	CNU018S-024-0011

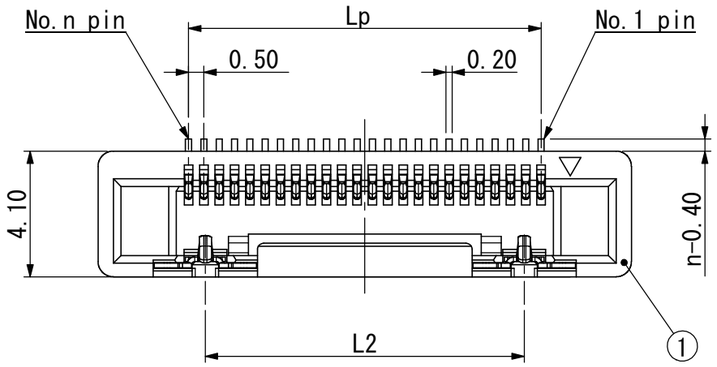

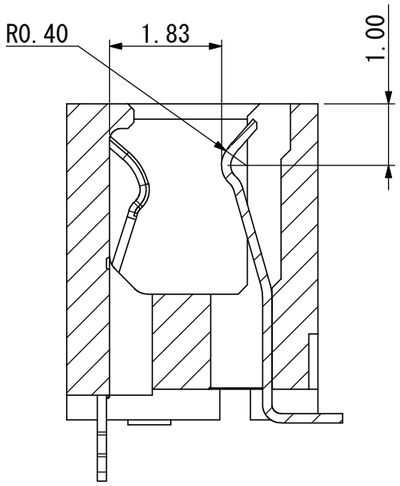

SEC.A-A(S=10/1)

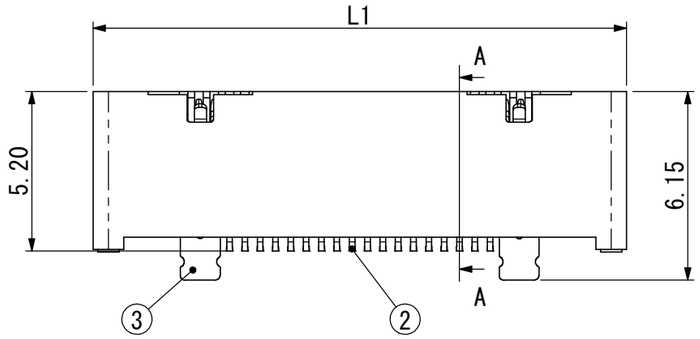

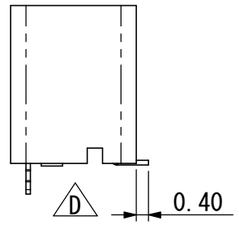

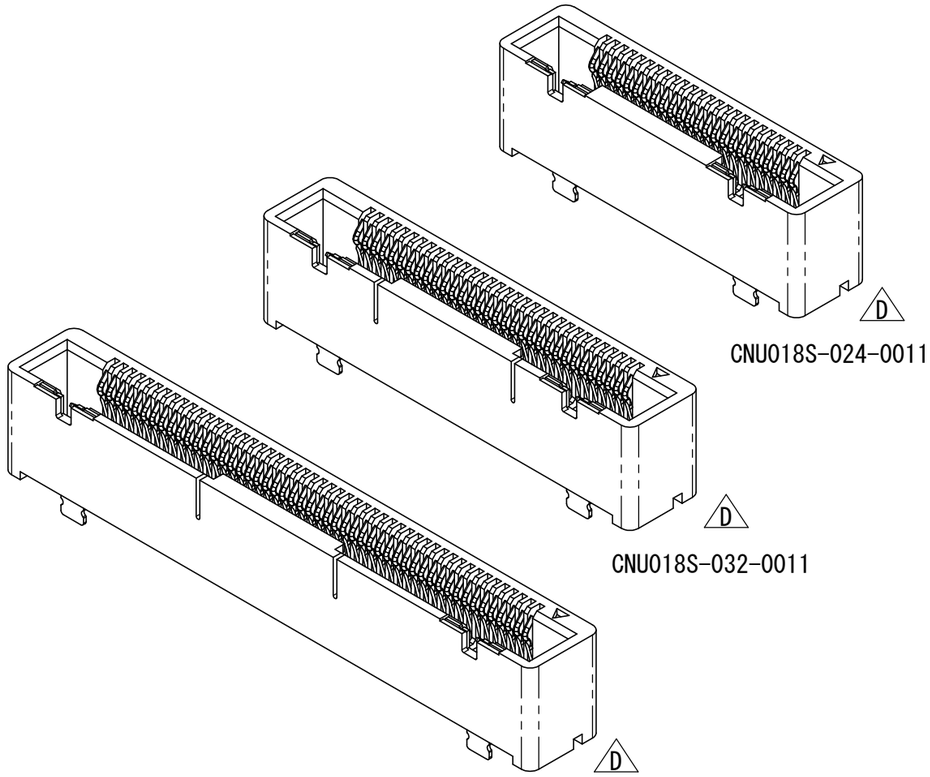

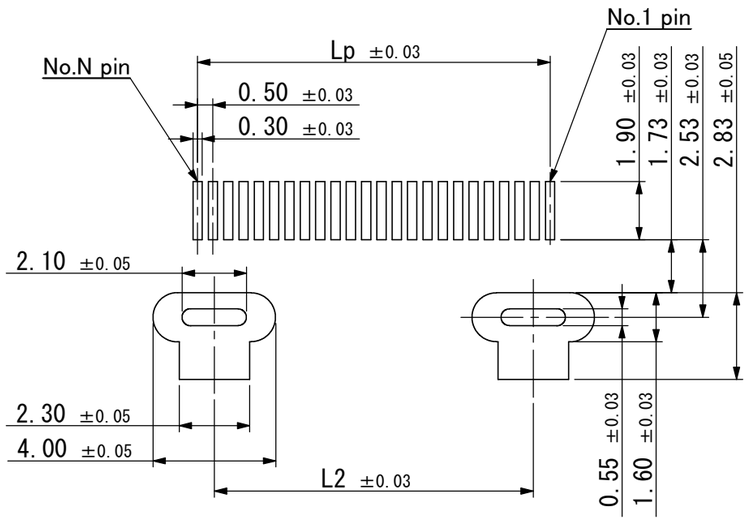

Recommended PCB layout(REF.)

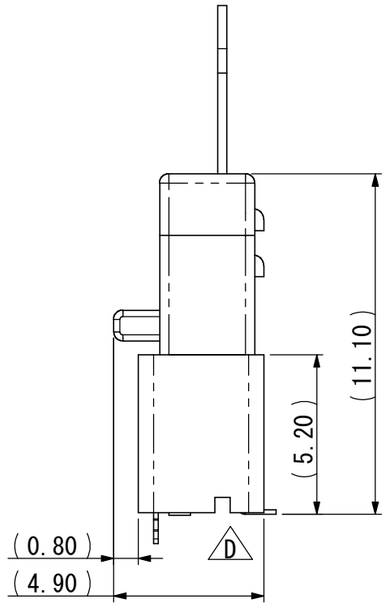

CNUP018-xxx-0001 mating condition

Note.
1. Coplanarity between terminal and reinforcement bracket terminal shoud be0.10mm max.
2. Performance shall be refered to YEU-F2012
3. Applicable plug
   CNU018P-xxx-0001

Item No.	Description	QNT.	Material	Content
3	Reinforcement bracket	2	SUS	Ni/Au
2	Contact	n	copper alloy	Ni/Au
1	Insulator	1	LCP	Black

Tolerance ±0.25 Unless otherwise specified.

YAMAICHI ELECTRONICS USA INC.

CLASS

SCALE 5/1	APP.	APP.	CHK.	DRW.	DSGN.
DIMENTION mm		13/05/09	13/05/09	13/05/09	13/05/09
ANGLE PROJ 3rd		K. Abe	K. Abe	O. Shimizu	O. Shimizu

TITLE CNU018S-xxx-0011

DRW No. YEU-A2198 | Sheet No. / | REV. D

A3-001