THIS DRAWING IS UNPUBLISHED. RELEASED FOR PUBLICATION 20
© COPYRIGHT 20 BY - ALL RIGHTS RESERVED.

REVISIONS					
P	LTR	DESCRIPTION	DATE	DWN	APVD
	J2	REVISED PER ECR-17-017609	04DEC2017	JB	DZ

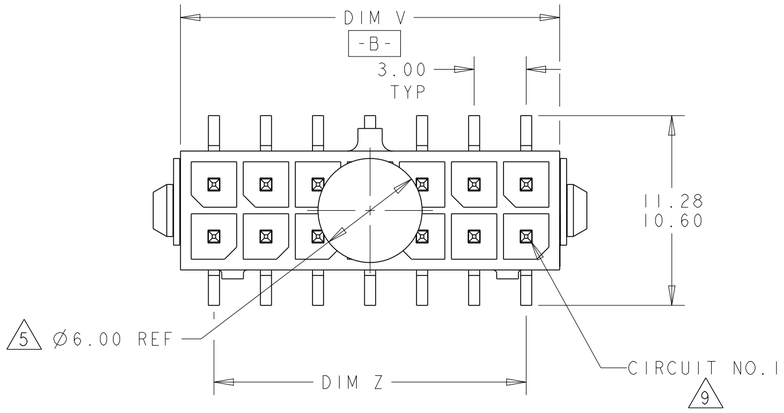

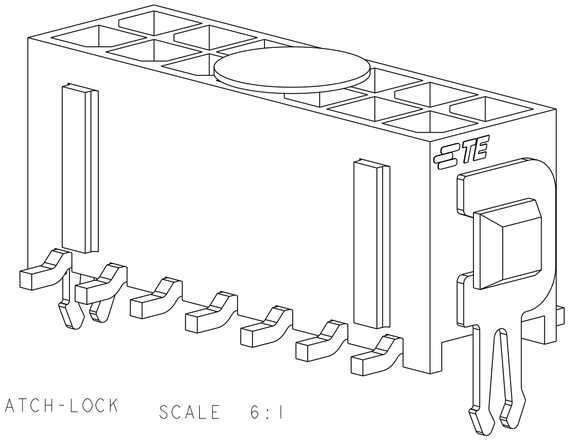

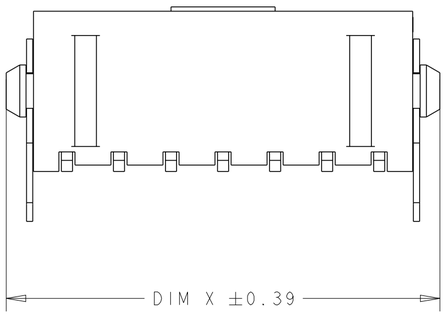

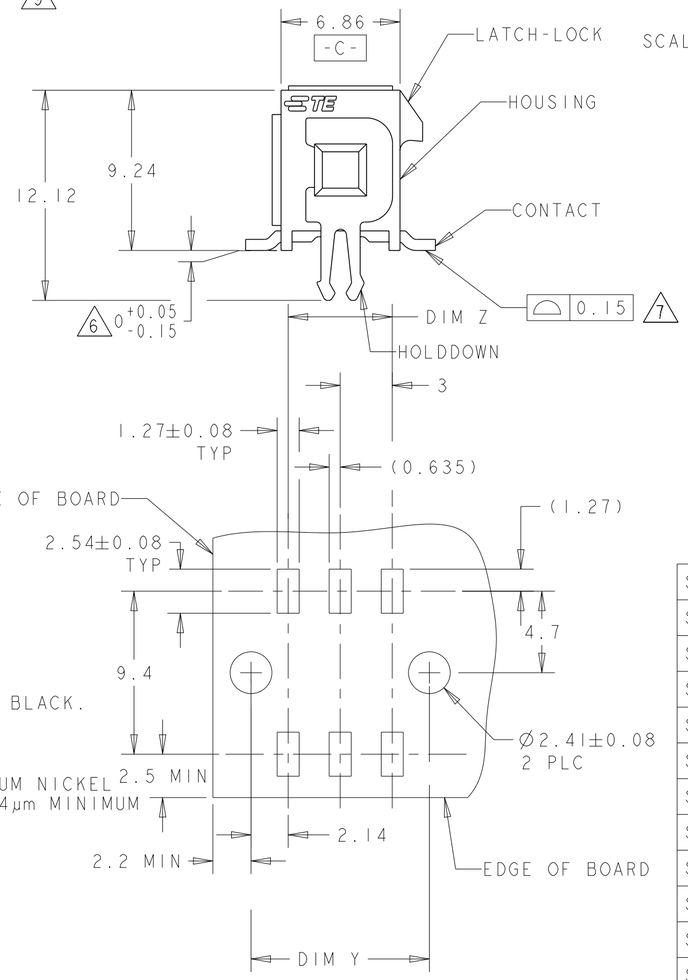

RECOMMENDED PCB LAYOUT 4
(COMPONENT SIDE)

	8	36.86	37.30	33.00	40.00	24	5-794634-4
	8	33.86	34.30	30.00	37.00	22	5-794634-2
	8	30.86	31.30	27.00	34.00	20	5-794634-0
	8	27.86	28.30	24.00	31.00	18	4-794634-8
	8	24.86	25.30	21.00	28.00	16	4-794634-6
	8	21.86	22.30	18.00	25.00	14	4-794634-4
	8	18.86	19.30	15.00	22.00	12	4-794634-2
	8	15.86	16.30	12.00	19.00	10	4-794634-0
	8	12.86	13.30	9.00	16.00	8	3-794634-8
	8	9.86	10.30	6.00	13.00	6	3-794634-6
	8	6.86	7.30	3.00	10.00	4	3-794634-4
	8	3.86	4.30	-	7.00	2	3-794634-2
SUPERSEDED BY 5-794634-4	2	36.86	37.30	33.00	40.00	24	~~2-794634-4~~
SUPERSEDED BY 5-794634-2	2	33.86	34.30	30.00	37.00	22	~~2-794634-2~~
SUPERSEDED BY 5-794634-0	2	30.86	31.30	27.00	34.00	20	~~2-794634-0~~
SUPERSEDED BY 4-794634-8	2	27.86	28.30	24.00	31.00	18	~~1-794634-8~~
SUPERSEDED BY 4-794634-6	2	24.86	25.30	21.00	28.00	16	~~1-794634-6~~
SUPERSEDED BY 4-794634-4	2	21.86	22.30	18.00	25.00	14	~~1-794634-4~~
SUPERSEDED BY 4-794634-2	2	18.86	19.30	15.00	22.00	12	~~1-794634-2~~
SUPERSEDED BY 4-794634-0	2	15.86	16.30	12.00	19.00	10	~~1-794634-0~~
SUPERSEDED BY 3-794634-8	2	12.86	13.30	9.00	16.00	8	~~794634-8~~
SUPERSEDED BY 3-794634-6	2	9.86	10.30	6.00	13.00	6	~~794634-6~~
SUPERSEDED BY 3-794634-4	2	6.86	7.30	3.00	10.00	4	~~794634-4~~
SUPERSEDED BY 3-794634-2	2	3.86	4.30	-	7.00	2	~~794634-2~~
	FINISH	DIM V	DIM Y	DIM Z	DIM X	NO. OF POSN.	PART NUMBER

1 MATERIAL;
CONTACTS - BRASS.
HOUSING - UL 94V-0 RATED HIGH TEMP NYLON, COLOR; BLACK.
HOLDDOWNS - PHOSPHOR BRONZE.

2 PLATING;
CONTACTS - 0.38µm MINIMUM GOLD OVER 2.54µm MINIMUM NICKEL ON MATING AREA. 2.54µm TIN-LEAD MINIMUM OVER 2.54µm MINIMUM ON SOLDER TAILS.
HOLDOWNS - 2.54µm TIN-LEAD.

4 RECOMMENDED PC BOARD THICKNESS OF 1.57.

5 KAPTON VACUUM PICK UP BUTTON.

6 DIMENSION APPLIES TO SOLDERTAIL SURFACES AND STANDOFF SURFACES.

7 ALL SOLDERTAILS.

8 PLATING;
CONTACTS - 0.38µm MINIMUM GOLD OVER 2.54µm MINIMUM NICKEL ON MATING AREA. 2.54µm MATTE TIN MINIMUM OVER 2.54µm MINIMUM ON SOLDER TAILS.
HOLDOWNS - 2.54µm MATTE TIN.

9 CIRCUIT NUMBER 1 IS LOCATED AT THE BOTTOM RIGHT WITH THE LATCH-LOCK ON TOP LOOKING INTO THE CAVITIES

THIS DRAWING IS A CONTROLLED DOCUMENT.

DIMENSIONS: mm

TOLERANCES UNLESS OTHERWISE SPECIFIED:
0 PLC ±-
1 PLC ±-
2 PLC ±0.13
3 PLC ±-
4 PLC ±-
ANGLES ±-

MATERIAL 1

FINISH SEE TABLE

DWN K. WHITAKER 19MAR2003
CHK C. JONES 19MAR2003
APVD C. JONES 19MAR2003
PRODUCT SPEC -
APPLICATION SPEC -
WEIGHT -

TE Connectivity

NAME SURFACE MOUNT, VERTICAL, MECHANICAL HOLDDOWN, ASSEMBLY, 15 GOLD HEADER, DUAL ROW, MICRO MATE-N-LOK™

SIZE	CAGE CODE	DRAWING NO	RESTRICTED TO
A2	00779	C-794634	-

CUSTOMER DRAWING | SCALE 4:1 | SHEET 1 OF 1 | REV J2

794634

1471-9 (3/13)