2N6034	2N6035	2N6036	PNP
2N6037	2N6038	2N6039	NPN

COMPLEMENTARY SILICON DARLINGTON POWER TRANSISTORS

TO-126 CASE

www.centralsemi.com

DESCRIPTION:
The CENTRAL SEMICONDUCTOR 2N6034, 2N6037 series devices are complementary silicon Darlington power transistors, manufactured by the epitaxial base process, designed for general purpose amplifier and switching applications.

MARKING: FULL PART NUMBER

MAXIMUM RATINGS: (T_C=25°C unless otherwise noted)

	SYMBOL	2N6034 2N6037	2N6035 2N6038	2N6036 2N6039	UNITS
Collector-Base Voltage	V_{CBO}	40	60	80	V
Collector-Emitter Voltage	V_{CEO}	40	60	80	V
Emitter-Base Voltage	V_{EBO}		5.0		V
Continuous Collector Current	I_C		4.0		A
Peak Collector Current	I_{CM}		8.0		A
Continuous Base Current	I_B		100		mA
Power Dissipation	P_D		40		W
Power Dissipation (T_A=25°C)	P_D		1.5		W
Operating and Storage Junction Temperature	T_J, T_{stg}		-65 to +150		°C
Thermal Resistance	Θ_{JA}		83.3		°C/W
Thermal Resistance	Θ_{JC}		3.12		°C/W

ELECTRICAL CHARACTERISTICS: (T_C=25°C unless otherwise noted)

SYMBOL	TEST CONDITIONS	MIN	MAX	UNITS
I_{CBO}	V_{CB}=Rated V_{CBO}		500	μA
I_{CEV}	V_{CE}=Rated V_{CEO}, V_{BE}=1.5V		100	μA
I_{CEV}	V_{CE}=Rated V_{CEO}, V_{BE}=1.5V, T_C=125°C		500	μA
I_{CEO}	V_{CE}=Rated V_{CEO}		100	μA
I_{EBO}	V_{EB}=5.0V		2.0	mA
BV_{CEO}	I_C=100mA (2N6034, 2N6037)	40		V
BV_{CEO}	I_C=100mA (2N6035, 2N6038)	60		V
BV_{CEO}	I_C=100mA (2N6036, 2N6039)	80		V
$V_{CE(SAT)}$	I_C=2.0A, I_B=8.0mA		2.0	V
$V_{CE(SAT)}$	I_C=4.0A, I_B=40mA		3.0	V
$V_{BE(SAT)}$	I_C=4.0A, I_B=40mA		4.0	V
$V_{BE(ON)}$	V_{CE}=3.0V, I_C=2.0A		2.8	V
h_{FE}	V_{CE}=3.0V, I_C=500mA	500		
h_{FE}	V_{CE}=3.0V, I_C=2.0A	750	15K	
h_{FE}	V_{CE}=3.0V, I_C=4.0A	100		
f_T	V_{CE}=10V, I_C=750mA, f=1.0MHz	25		MHz
C_{ob}	V_{CB}=10V, I_E=0, f=100kHz (PNP)		200	pF
C_{ob}	V_{CB}=10V, I_E=0, f=100kHz (NPN)		100	pF

R1 (12-March 2014)

2N6034	2N6035	2N6036	PNP
2N6037	2N6038	2N6039	NPN

COMPLEMENTARY SILICON DARLINGTON POWER TRANSISTORS

TO-126 CASE - MECHANICAL OUTLINE

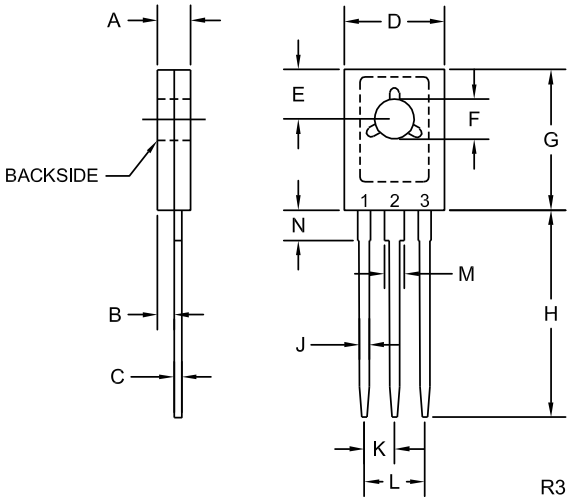

LEAD CODE:
1) Emitter
2) Collector
3) Base

MARKING:
FULL PART NUMBER

DIMENSIONS				
	INCHES		MILLIMETERS	
SYMBOL	MIN	MAX	MIN	MAX
A	0.094	0.110	2.40	2.80
B	0.050		1.27	
C	0.015	0.030	0.38	0.75
D	0.291	0.335	7.40	8.50
E	0.148		3.75	
F	0.118	0.134	3.00	3.40
G	0.413	0.472	10.50	12.00
H	0.618		15.70	
J	0.024	0.035	0.62	0.90
K	0.089		2.25	
L	0.177		4.50	
M	0.045	0.055	1.14	1.40
N	0.083		2.10	

TO-126 (REV:R3)

R1 (12-March 2014)

OUTSTANDING SUPPORT AND SUPERIOR SERVICES

PRODUCT SUPPORT

Central's operations team provides the highest level of support to insure product is delivered on-time.

- Supply management (Customer portals)
- Inventory bonding
- Consolidated shipping options
- Custom bar coding for shipments
- Custom product packing

DESIGNER SUPPORT/SERVICES

Central's applications engineering team is ready to discuss your design challenges. Just ask.

- Free quick ship samples (2nd day air)
- Online technical data and parametric search
- SPICE models
- Custom electrical curves
- Environmental regulation compliance
- Customer specific screening
- Up-screening capabilities
- Special wafer diffusions
- PbSn plating options
- Package details
- Application notes
- Application and design sample kits
- Custom product and package development

REQUESTING PRODUCT PLATING

1. If requesting Tin/Lead plated devices, add the suffix " TIN/LEAD" to the part number when ordering (example: 2N2222A TIN/LEAD).
2. If requesting Lead (Pb) Free plated devices, add the suffix " PBFREE" to the part number when ordering (example: 2N2222A PBFREE).

CONTACT US

Corporate Headquarters & Customer Support Team

Central Semiconductor Corp.
145 Adams Avenue
Hauppauge, NY 11788 USA
Main Tel: (631) 435-1110
Main Fax: (631) 435-1824
Support Team Fax: (631) 435-3388
www.centralsemi.com

Worldwide Field Representatives:
www.centralsemi.com/wwreps

Worldwide Distributors:
www.centralsemi.com/wwdistributors

For the latest version of Central Semiconductor's **LIMITATIONS AND DAMAGES DISCLAIMER**, which is part of Central's Standard Terms and Conditions of sale, visit: www.centralsemi.com/terms