THIS DRAWING IS UNPUBLISHED. RELEASED FOR PUBLICATION 20
© COPYRIGHT 20 BY - ALL RIGHTS RESERVED.

REVISIONS

P	LTR	DESCRIPTION	DATE	DWN	APVD
	H6	REVISED PER ECO-11-018497	09SEP2011	DLD	DCM
	H7	REVISED PER ECO-14-015177	15OCT2014	DLD	DCM

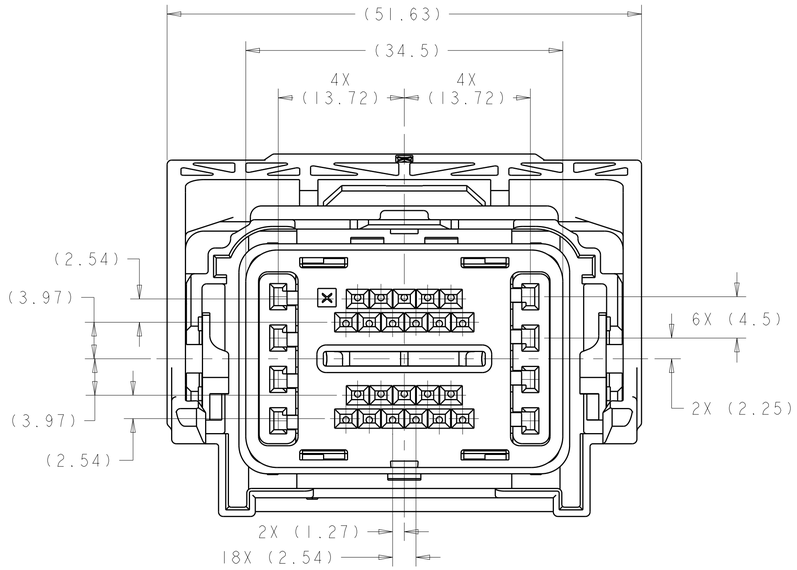

KEYING OPTION "A" 3
1438083-1

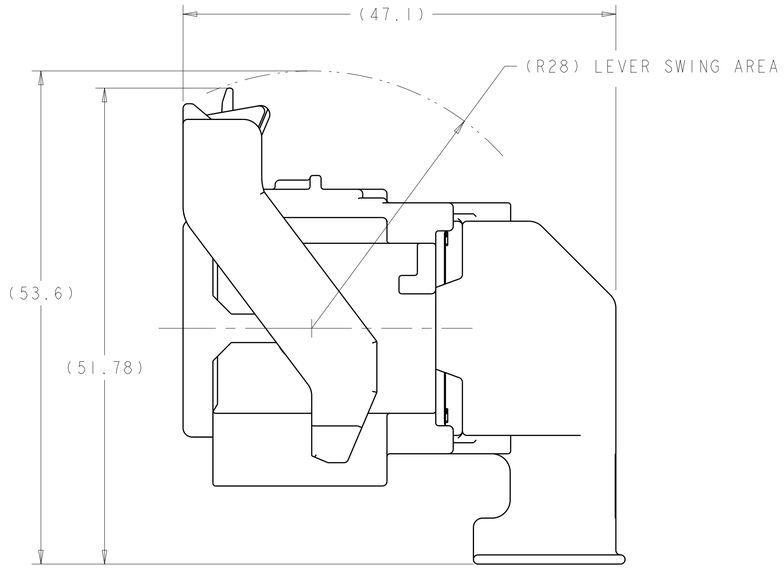

SHOWN WITH CAM LEVER AND SPACER
IN LOADED POSITION WITH
OPTIONAL WIRESHIELD

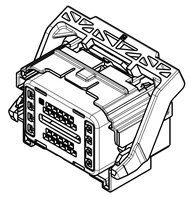

SCALE 1:1

1 MATERIAL:
HARNESS - 35% GLASS FILLED PA66, BLACK
ALT MAT'L - 30% GLASS FILLED sPS, BLACK

SPACER - 40% GLASS FILLED PPS, RED
ALT MAT'L - 30% GLASS FILLED sPS, RED

COVER - 35% GLASS FILLED PA66, BLACK
ALT MAT'L - 30% GLASS FILLED LCP, BLACK

CAM LEVER - 35% GLASS FILLED NYLON, GRAY
GROMMET - SILICONE, BROWN
PERIMETER SEAL - SILICONE, GREEN

2. CAM LEVER AND SPACER ARE SHIPPED IN PRE-LATCH POSITION.

3 SEE PINOUT CHART FOR CLOSED CIRCUIT CONFIGURATIONS.

4 CAVITIES WITH A NUMERIC SYMBOL INDICATES CLOSED TERMINAL LOCATIONS.
BLANK CAVITIES INDICATE OPEN TERMINAL HOLE LOCATIONS.

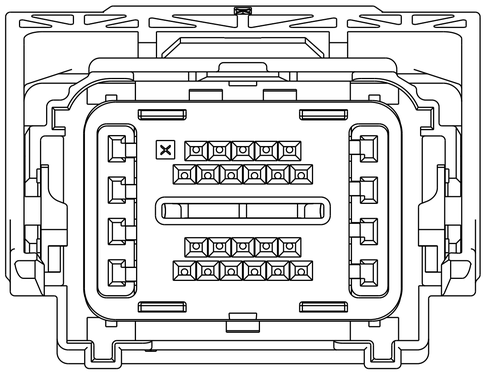

KEYING OPTION "B" 3
2272926-1

CHART FOR CLOSED CIRCUIT CONFIGURATIONS
SHEET 2

THIS DRAWING IS A CONTROLLED DOCUMENT.

DIMENSIONS: mm

TOLERANCES UNLESS OTHERWISE SPECIFIED:
0 PLC ±-
1 PLC ±0.3
2 PLC ±0.10
3 PLC ±-
4 PLC ±-
ANGLES ±1°

MATERIAL - 1 -
FINISH - -

DWN R. VESTAL 15OCT2003
CHK D. STRAUSSER 15OCT2003
APVD D. STRAUSSER 15OCT2003
PRODUCT SPEC -
APPLICATION SPEC -
WEIGHT -

TE Connectivity

NAME PCM HARNESS ASSEMBLY, 30-WAY CONNECTOR

SIZE	CAGE CODE	DRAWING NO	RESTRICTED TO
A1	00779	C-1438083	-

CUSTOMER DRAWING SCALE 3:1 SHEET 1 OF 2 REV H7

4805 (3/13)

THIS DRAWING IS UNPUBLISHED. RELEASED FOR PUBLICATION 20
© COPYRIGHT 20 BY - ALL RIGHTS RESERVED.

REVISIONS

P	LTR	DESCRIPTION	DATE	DWN	APVD
	-	SEE SHEET 1	-	-	-

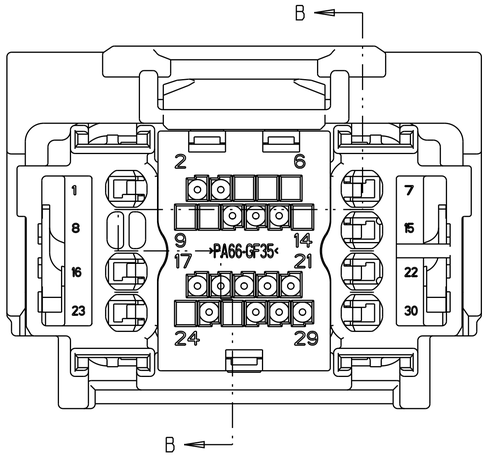

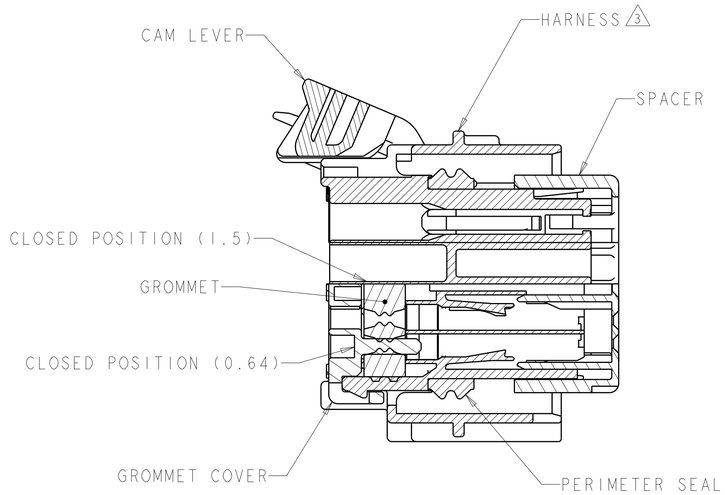

SECTION B-B

30	29	28	27	26	25	24	23	22	21	20	19	18	17	16	15	14	13	12	11	10	9	8	7	6	5	4	3	2	1	PART NUMBER	FORD PART NUMBER
																														2272926-1	GU5T-14A464-XA-000

TERMINAL HOLE POSITION

PIN-OUT CHART KEYING OPTION "B" 4

30	29	28	27	26	25	24	23	22	21	20	19	18	17	16	15	14	13	12	11	10	9	8	7	6	5	4	3	2	1	PART NUMBER	FORD PART NUMBER
30					25	24	23	22	21	20	19	18	17	16	15			12	11	10		8		6	5	4	3	2	1	4-1438083-2	2LIT-14A464-UC-038
	29		27	26	25	24			21	20			17		15	14	13	12	11	10	9	8	7	6	5	4	3	2		4-1438083-1	2LIT-14A464-UC-037
	29	28	27	26	25	24	23	22	21	20	19	18	17		15	14	13		11	10	9	8	7	6	5	4		2	1	4-1438083-0	2LIT-14A464-UC-036
	29	28					23	22		20	19	18	17		15	14	13		11	10	9	8		6	5	4		2		3-1438083-9	2LIT-14A464-UC-035
30	29	28	27	26	25	24	23	22	21	20	19	18	17	16	15	14	13		11	10	9	8	7	6	5	4		2	1	3-1438083-8	2LIT-14A464-UC-034
	29	28	27	26	25	24	23	22		20	19	18	17		15	14	13		11	10	9	8	7	6	5	4				3-1438083-7	2LIT-14A464-UC-033
	29	28	27	26	25	24	22	22		20	19	18	17		15	14	13		11	10	9	8	7	6	5	4		2		3-1438083-6	2LIT-14A464-UC-032
		28					23			20	19	18	17		15	14	13		11									2		3-1438083-5	2LIT-14A464-UC-031
									21	20	19	18				14	13			10							4	3	2		3-1438083-4	2LIT-14A464-UC-030
30	29	28	27	26	25	24	23	22	21	20	19	18	17	16	15	14	13	12	11	10	9	8	7	6	5	4	3	2	1	3-1438083-3	2LIT-14A464-UC-029
	29	28	27	26	25	24		22	21	20			17		15	14	13	12	11	10	9	8	7	6	5	4	3	2		3-1438083-2	2LIT-14A464-UC-028
		28	27	26	25	24	23		21	20			17		15	14	13	12	11				7				3	2		3-1438083-1	2LIT-14A464-UC-027
		28	27	26	25	24	23		21	20			17		15	14	13						7					2		3-1438083-0	2LIT-14A464-UC-026
	29	28	27	26	25	24	23	22	21	20	19	18	17		15	14	13	12	11	10	9	8	7	6	5	4	3	2		2-1438083-9	2LIT-14A464-UC-025
		28					23			20	19	18	17		15	14	13											2		2-1438083-8	2LIT-14A464-UC-024
	29	28	27	26	25	24	23	22		20	19	18	17		15	14	13	12	11	10	9	8	7	6	5	4	3			2-1438083-7	2LIT-14A464-UC-023
	29	28	27	26	25	24	23	22	21	20	19	18	17		15	14	13			10	9	8	7	6	5	4		2		2-1438083-6	2LIT-14A464-UC-022
		28	27	26	25	24	23		21	20	19	18	17		15	14	13						7					2		2-1438083-5	2LIT-14A464-UC-021
						24	23		21	20	19	18	17	16	15							8				4				2-1438083-3	2LIT-14A464-UC-019
						24	23		21	20	19	18	17	16	15							8		6		4				2-1438083-2	2LIT-14A464-UC-018
						24	23		21	20	19	18	17	16	15							8			5	4				2-1438083-1	2LIT-14A464-UC-017
30	29	28					23	22		20	19	18	17	16	15	14	13			10	9	8		6	5	4		2	1	2-1438083-0	2LIT-14A464-UC-016
						24	23							16	15							8			5	4				1-1438083-9	2LIT-14A464-UC-015
30	29	28	27	26	25	24	23	22	21	20	19	18	17	16	15	14	13			10	9	8	7	6	5	4		2	1	1-1438083-8	2LIT-14A464-UC-014
						24	23							16	15							8								1-1438083-7	2LIT-14A464-UC-013
						24	23							16	15							8				4				1-1438083-6	2LIT-14A464-UC-012
						24	23							16	15							8		6						1-1438083-5	2LIT-14A464-UC-011
						24	23							16	15							8		6		4				1-1438083-4	2LIT-14A464-UC-010
	29	28	27	26	25	24	23	22		20	19	18	17	16	15	14	13	12	11	10	9	8	7	6	5	4	3		1	1-1438083-3	2LIT-14A464-UC-009
30	29	28					23	22		20	19	18	17	16	15	14	13	12	11	10	9	8		6	5	4	3	2	1	1-1438083-2	2LIT-14A464-UC-008
	29	28								20	19	18	17			14	13	12	11	10	9			6	5			2		1-1438083-1	2LIT-14A464-UC-007
	29	28								20	19	18	17			14	13	12	11	10	9			6	5	4		2		1-1438083-0	2LIT-14A464-UC-006
	29	28								20	19	18	17			14	13	12	11	10	9			6	5		3	2		1438083-9	2LIT-14A464-UC-005
	29	28								20	19	18	17			14	13	12	11	10	9			6	5	4	3	2		1438083-8	2LIT-14A464-UC-004
	29	28	27	26	25	24				20	19	18	17			14	13	12	11	10	9			6	5	4	3			1438083-7	2LIT-14A464-UC-003
30						24		22						16	15					10	9	8	7	6	5	4			1	1438083-6	2LIT-14A464-UC-002
30				26		24		22						16	15	14				10	9	8	7	6	5	4			1	1438083-5	2LIT-14A464-UC-001
																														1438083-1	2LIT-14A464-UC-000

TERMINAL HOLE POSITION

PIN-OUT CHART KEYING OPTION "A" 4

THIS DRAWING IS A CONTROLLED DOCUMENT.

DIMENSIONS: mm

TOLERANCES UNLESS OTHERWISE SPECIFIED:
0 PLC ±-
1 PLC ±0.3
2 PLC ±0.10
3 PLC ±-
4 PLC ±-
ANGLES ±1°

MATERIAL - -
FINISH - -

DWN R. VESTAL 15OCT2003
CHK D. STRAUSSER 15OCT2003
APVD D. STRAUSSER 15OCT2003
PRODUCT SPEC -
APPLICATION SPEC -
WEIGHT -

TE Connectivity

NAME PCM HARNESS ASSEMBLY, 30-WAY CONNECTOR

SIZE A1 | CAGE CODE 00779 | DRAWING NO C-1438083 | RESTRICTED TO -

Customer Drawing | SCALE 3:1 | SHEET 2 OF 2 | REV H7

4805 (3/13)