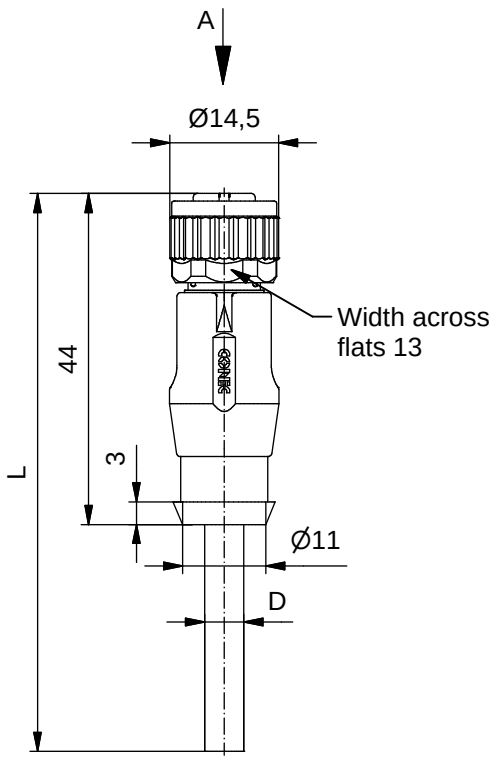

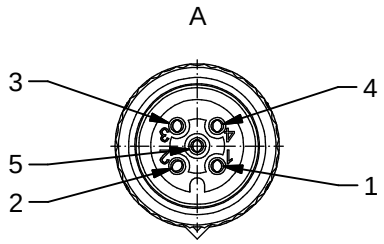

Technical specification:

Rated voltage: IEC 61076-2-101	5pos 60 V
Current rating: IEC 61076-2-101	4 A at 40℃
Insulation resistance: IEC 60512	>=100 MΩ
Pollution degree: IEC 60664-1	3/2
Degree of protection: IEC 60529	IP 67, in mated condition
Temperature range: IEC 60664-1	-30℃ ... +80℃
Mating cycles: IEC 60512-9a	>=100

Materials:

Contact:	CuZn
Contact plating:	Nickel, gold plated
Contact carrier:	TPU GF, UL 94
Sealing:	FPM
Coupling nut:	GD-Zn, nickel plated
Moulding body:	TPU, UL 94, grey

Installation specification:

Recommended torque:	0,6 Nm
Conec installation tool:	Torque wrench: 36-000200 Insert across flats 13: 36-000220

Contact assignment:

1) brown
2) white
3) blue
4) black
5) green-yellow

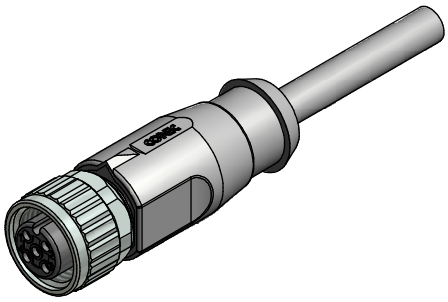

Part no:	Description:	Length L:	Cable:
43-10040	SAL - 12 - RK5 - 2 / A1	2m	PVC, grey, 5x0,34mm² Cable: 781-A13500
43-10041	SAL - 12 - RK5 - 3 / A1	3m	
43-10042	SAL - 12 - RK5 - 5 / A1	5m	
43-10043	SAL - 12 - RK5 - 10 / A1	10m	
43-xxxxx	SAL - 12 - RK5 - ... / A1	x	

D see data sheet cable

DO NOT ALTER CAD DRAWING BY HAND

Directive 2002/95/EC RoHS compliant

Index: a 11.01.11 VF Ä3767
Coupling nut modified, spanner flats added, data sheet modified

tolerance of cable: L <= 4m: L + 40mm; L > 4m: L + 1%

general tolerance: 0 ± 0,50mm; 0,0 ± 0,25mm; 0,00 ± 0,10mm

THIS DRAWING MAY NOT BE COPIED OR REPRODUCED IN ANY WAY, AND MAY NOT BE PASSED ON TO A THIRD PARTY WITHOUT WRITTEN PERMISSION. OWNERSHIP AND COPYRIGHT OF CONEC GmbH

dim. in mm

	date	name
drawn	08.03.07	Fromm
appd.	08.03.07	Mankopf

title: Female connector M12x1 axial

dwg no: 43K1A067

part no: see table