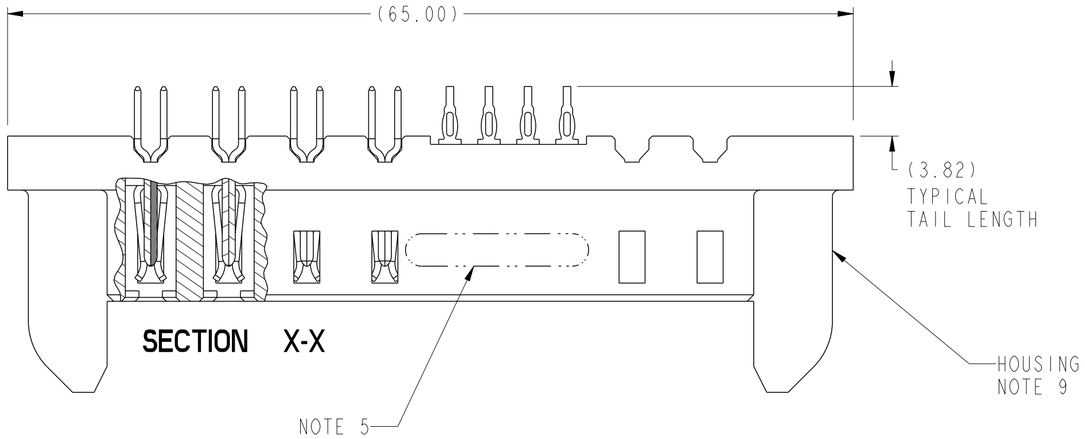


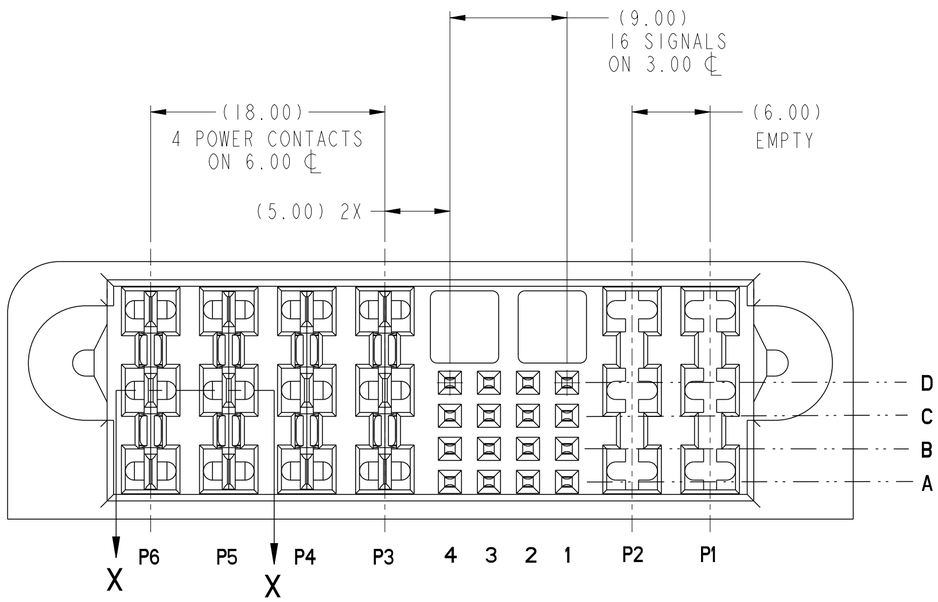


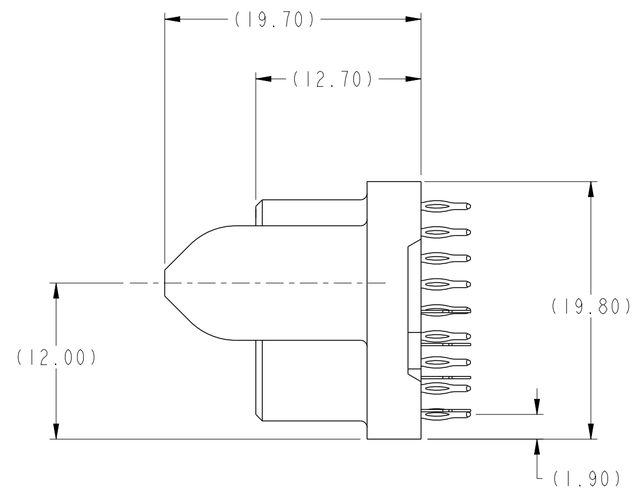


| | | | | | | | | |
|---|---|---|---|---|---|---|---|---|
| spec ref | * | | dr | NotFound DuWa | 2010/06/02 | projection | MM | size A2 / scale 3:1 |
| tolerance std - ASME Y14.5 | TOLERANCES UNLESS OTHERWISE SPECIFIED | | eng | De-Ming Lu | 2014/12/28 | | | ecn no ELX-DG-19849-1 |
| | | | chr | - | - | | | |
| | | | appr | Pei-Ming Zheng | 2014/12/29 | product family HCI | | rel level Released |
| surface - ASME Y14.5 | linear | 0.X ±0.5 | FCI | title VERT RECPT ASSY 2P+16S+4P | | dwg no 10095341 | | rev B |
| | | 0.XX ±0.25 | | HCI POWER CONNECTOR | | | | |
| | | 0.XXX ±0.10 | www.fci.com | cat. no. - | | Product - Customer Drw | | sheet 1 of 4 |
| | angular | 0° ±2° | | | | | | |

Copyright FCI.

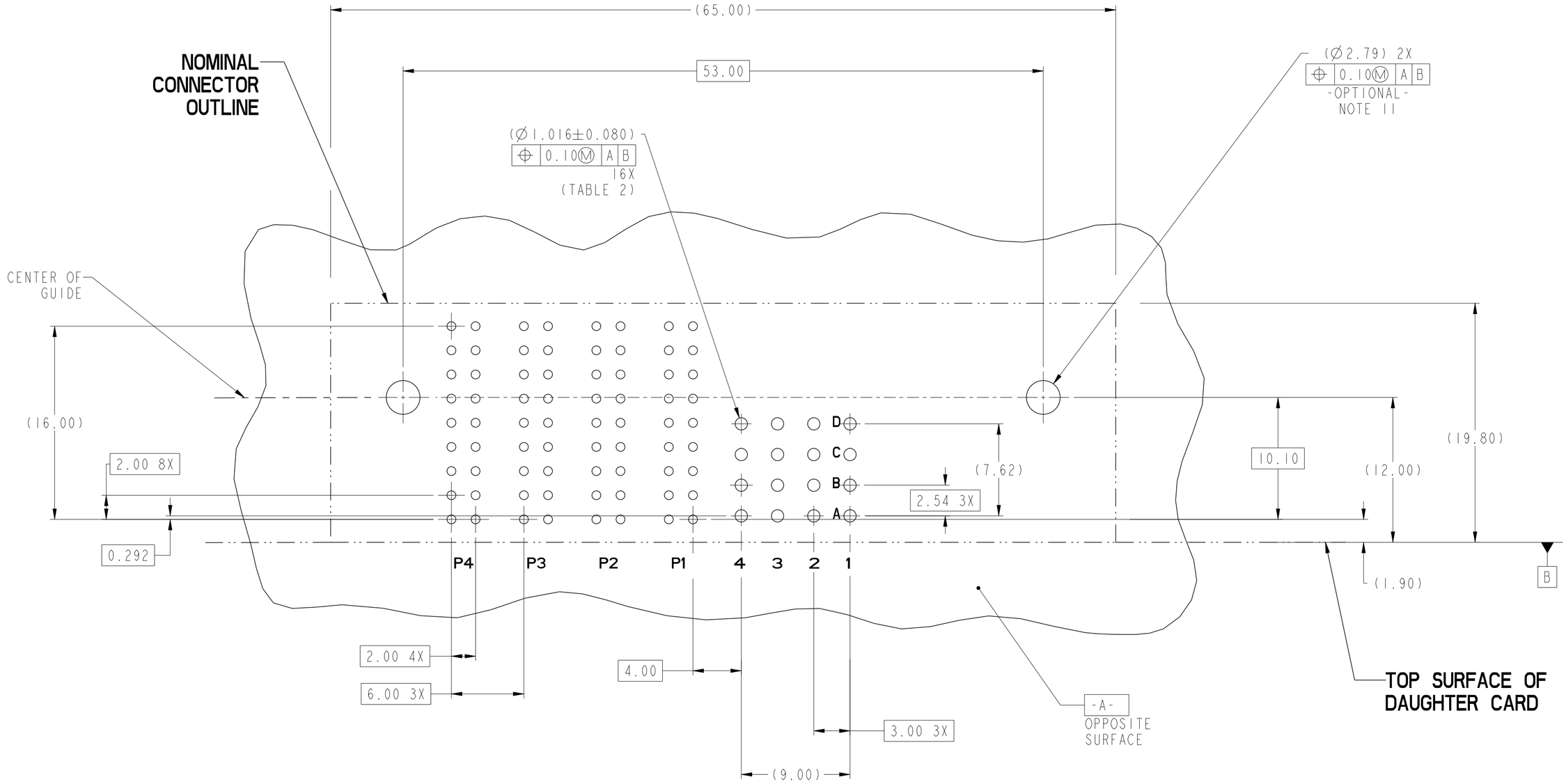


RECOMMENDED PCB LAYOUT
COMPONENT SIDE
NOTE 6

| | | | | | |
|---|---|---|---|---|---|
| dr | NotFound DuWa | 2010/06/02 | projection | MM | size A2 / scale 4:1 |
| eng | De-Ming Lu | 2014/12/28 | | | ecn no ELX-DG-19849-1 |
| chr | - | - | | | |
| appr | Pei-Ming Zheng | 2014/12/29 | product family - | | rel level Released |
| title | VERT RECPT ASSY 2P+16S+4P HCI POWER CONNECTOR | | dwg no 10095341 | | rev B |
| www.fci.com | cat. no. - | | Product - Customer Drw | | sheet 2 of 4 |

Copyright FCI.

| TOP LAYER DESCRIPTION | TABLE 1 (HCI POWER) PLATED THROUGH-HOLE REQUIREMENTS | | | | | | | |
|---|---|---|---|---|---|---|---|---|
| | DRILLED HOLE DIAMETER | COPPER THICKNESS | TIN-LEAD THICKNESS | NICKEL THICKNESS | GOLD THICKNESS | TIN THICKNESS | SILVER THICKNESS | FINISHED HOLE DIAMETER |
| TIN-LEAD | 0.81-0.86 (0.85 DRILL) | 0.025 - 0.050 | 0.005 - 0.015 | -- | -- | -- | -- | 0.65 - 0.80 |
| IMMERSION TIN | 0.81-0.86 (0.85 DRILL) | 0.025 - 0.050 | -- | -- | -- | 0.9 - 1.5um | -- | 0.70 - 0.80 |
| IMMERSION SILVER | 0.81-0.86 (0.85 DRILL) | 0.025 - 0.050 | -- | -- | -- | -- | 0.15 - 0.65um | 0.70 - 0.80 |
| COPPER (SEE NOTE 9) | 0.81-0.86 (0.85 DRILL) | 0.025 - 0.050 | -- | -- | -- | -- | -- | 0.70 - 0.80 |
| GOLD | 0.81-0.86 (0.85 DRILL) | 0.025 - 0.050 | -- | 0.003 - 0.007 | FLASH UP TO 0.0002 | -- | -- | 0.69 - 0.80 |

| TOP LAYER DESCRIPTION | TABLE 2 (HPC SIGNALS) PLATED THROUGH-HOLE REQUIREMENTS | | |
|---|---|---|---|
| | DRILLED HOLE DIAMETER | COPPER THICKNESS | FINISHED HOLE DIAMETER |
| TIN-LEAD | 1.125-1.175 (Ø.0453±.0010) | 0.025-0.050 | 0.94 - 1.10 (Ø.040±.003) |

Copyright FCI.

| | | | | | |
|---|---|---|---|---|---|
| dr | NotFound DuWa | 2010/06/02 | projection | MM | size A2 / scale 1:1 |
| eng | De-Ming Lu | 2014/12/28 | | | ecn no ELX-DG-19849-1 |
| chr | - | - | | | |
| appr | Pei-Ming Zheng | 2014/12/29 | product family - | | rel level Released |
| FCI | title VERT RECPT ASSY 2P+16S+4P HCI POWER CONNECTOR | | dwg no 10095341 | | rev B |
| www.fci.com | cat. no. - | | Product - Customer Drw | | sheet 3 of 4 |

| PART NUMBER | M2.5 SCREW NOTE 11 | TAIL PLATING | TAIL TYPE |
|---|---|---|---|
| 10095341-001 | OPTIONAL | SnPb | PRESS-FIT |
| 10095341-001LF | OPTIONAL | Sn | PRESS-FIT |

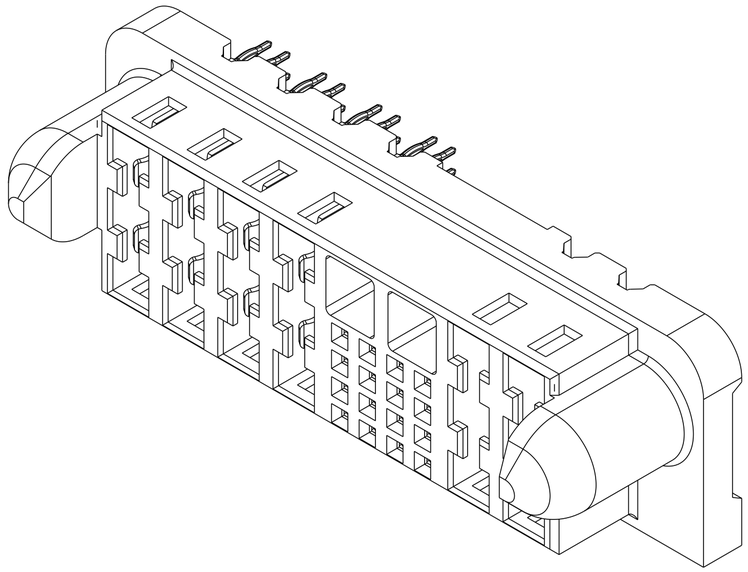

NOTES:

1. CONNECTOR MATERIALS:
   HOUSING: HIGH TEMPERATURE THERMOPLASTIC, BLACK
   UL 94V-0 COMPLIANT
   CONTACTS: HIGH PERFORMANCE COPPER ALLOY
2. CONTACT FINISH(ref. GS-12-380 SECTION 5.2)
3. PRODUCT SPECIFICATION: GS-12-380.
4. APPLICATION SPECIFICATION: GS-20-070.
5. PRODUCT MARKING (PRODUCT NUMBER & DATE CODE) ON HOUSING IN AREA SHOWN.
6. MINIMUM NOMINAL PCB THICKNESS: 1.6mm
7. PACKAGING MEETS FCI SPECIFICATION GS-14-1073.
8. HOUSING COMPONENT WILL WITHSTAND EXPOSURE TO 260°C PEAK TEMPERATURE FOR 60 SECONDS IN A CONVECTION, INFRA-RED, OR VAPOR PHASE REFLOW OVEN.
9. COPPER PLATING THICKNESS IN CENTER OF VIA-HOLE CAN BE NO MORE THAN 0.003 LESS THAN OTHER AREAS.
10. ALL HOLE SIZES ARE FINISHED HOLE SIZES.
11. RECOMMENDED RETENTION TO PCB.

    ∅0.110[2.79] THRU HOLE (UNPLATED) FOR M2.5 SELF THREADING SCREW, MAX HEAD ∅0.177[4.50].
    RECOMMENDED SCREW LENGTH 0.276[7.00] + PCB THICKNESS.
    RECOMMENDED SCREW SEATING TO PCB TORQUE: 2-5 lbf-in (2300-5760 gf-cm).

Copyright FCI.

| | | | | | |
|---|---|---|---|---|---|
| dr | NotFound DuWa | 2010/06/02 | projection | MM | size A2 / scale 3:1 |
| eng | De-Ming Lu | 2014/12/28 | | | ecn no ELX-DG-19849-1 |
| chr | - | - | | | |
| appr | Pei-Ming Zheng | 2014/12/29 | product family HCI | | rel level Released |

title: VERT RECPT ASSY 2P+16S+4P
HCI POWER CONNECTOR

dwg no: 10095341 rev B

www.fci.com | cat. no. - | Product - Customer Drw | sheet 4 of 4