LOADING PATTERN MATING SIDE

	POS 01				POS 05				POS 10				POS 15				POS 20				POS 25			
f	0	0	0	0	0	0	0	0	0	0	0				0	0	0	0	0	0	0	0	0	0
e	5	5	4	4	4	4	4	4	4	4	4				4	6	4	6	4	6	4	4	4	4
d	5	5	4	6	4	6	4	6	4	6	4				6	4	6	4	6	4	4	4	4	4
c	5	5	4	4	4	4	4	4	4	4	4				4	4	4	4	4	6	4	4	4	4
b	5	5	4	5	4	5	4	5	4	5	4				5	4	5	4	5	4	5	4	5	4
a	5	5	4	4	4	4	4	4	4	4	4				4	4	4	4	4	4	4	4	4	4
z	0	0	0	0	0	0	0	0	0	0	0				0	0	0	0	0	0	0	0	0	0

LOADED CONNECTOR ASSEMBLY
(FOR EXAMPLE)

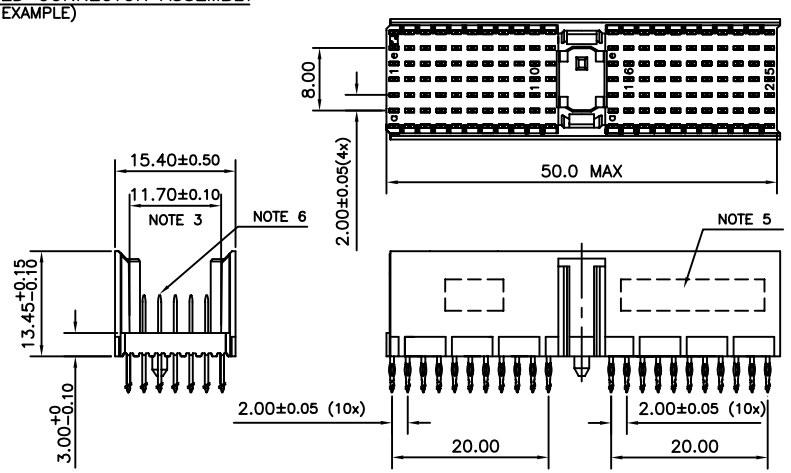

CONTACT OVERVIEW

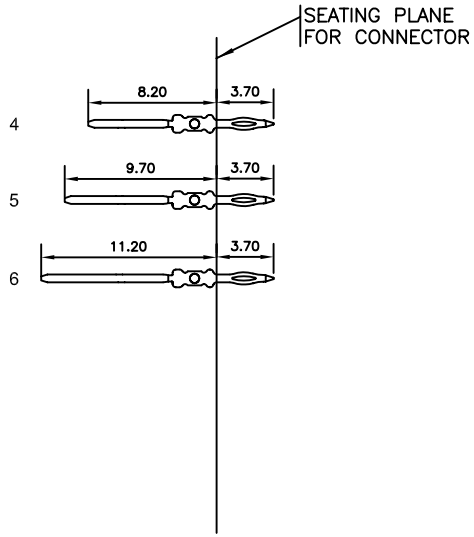

LAY–OUT P.C.B.–HOLE

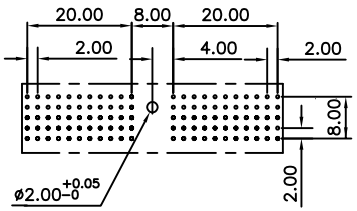

HM2P07PDP3A0--

LEAD FREE INDICATOR : LF = LEAD FREE
(DIGIT 15 & 16)

PLATING CODE (DIGIT 13 AND 14)
(REF DRW NO. BS,C , 201844 , 003)

NOTES

1. THIS PRODUCT IS CSA APPROVED.
2. THIS PRODUCT IS UL RECOGNIZED.
3. MEASURED AT THE BOTTOM.
4. MATERIAL CONTACT: PHOSPHORBRONZE
   HOUSING: CREAM WHITE GLASS FILLED POLYESTER UL-94V0
5. CONNECTOR PRINTED WITH P/N AND DATE CODE.
6. FOR ACTUAL CONTACT LOADINGS, SEE LOADING PATTERN MATING SIDE.
7. SHAPE OF CONNECTOR HOUSING CAN ALTER DEPENDING ON PRODUCTION LOCATION
8. THE PRODUCT (LF) MEETS EUROPEAN UNION DIRECTIVES AND OTHER COUNTRY REGULATIONS AS DESCRIBED IN GS-22-008
9. FOR RECOMMENDED PTH DIMENSIONS REFER DRAWING : BS, A , 201572 , 001

CATALOG NO: HM2P07PDP3A0----

mat'l. code: SEE NOTE 4				surface: ISO 1302	tolerance: ISO 406 ISO 1101	projection	product family: MILLIPACS
ltr	ecn no	dr	date	tolerances unless otherwise specified			title
A	I11-0181	AB	2011-11-07	angles: 0°±1°	linear: .0±0.2, .00±0.1	MM	MPACS 5+2R STR HDR PF CONN TYPE A
						scale –	
				dr: ALEX BABU	2011-11-07		dwg no: BS, C ,203028, 976 — sheet 1 of 1 — size A3
				engr: ALEX BABU	2011-11-07		
				chr: ALEX BABU	2011-11-07		
				appd: BIJU K PAUL	2011-11-07		type: Product Customer Drawing
sheet index	revision sheet	A 1					

form: A3

PDM: Rev:A STATUS:Released Printed: Nov 09, 2011

FCIconnect.com
Copyright FCI