THIS DRAWING IS UNPUBLISHED. RELEASED FOR PUBLICATION -.- .
© COPYRIGHT - BY TYCO ELECTRONICS CORPORATION. ALL RIGHTS RESERVED.

LOC	DIST
AD	25

REVISIONS

P	LTR	DESCRIPTION	DATE	DWN	APVD
	A	RELEASED	25OCT05	JDP	AMS

1. HOUSING MATERIAL: GLASS-FILLED POLYMER.
2. CONTACT MATERIAL: COPPER ALLOY.
3. MARKING ON THIS SIDE.
4. CONTACT FINISH: DIN 41612 CLASS 2 IN CONTACT AREA. TIN-LEAD PLATE ON POSTS.
5. TAIL LENGTH AFTER SEATING IN PC BOARD.
6. PART NUMBER AND DATE CODE IN THIS APPROXIMATE AREA.
7. ACTION PIN POSTS REQUIRE 1.57[.062] MINIMUM THICK PC BOARD. RECOMMENDED PC BOARD DRILLED HOLES ARE Ø1.15±0.025[.0453±.0010] WITH 0.02-0.08[.001-.003] COPPER AND 0.008[.0003] MINIMUM TIN-LEAD PLATING. FINISHED HOLE AFTER PLATING IS Ø1.02±0.08[.040±.003].

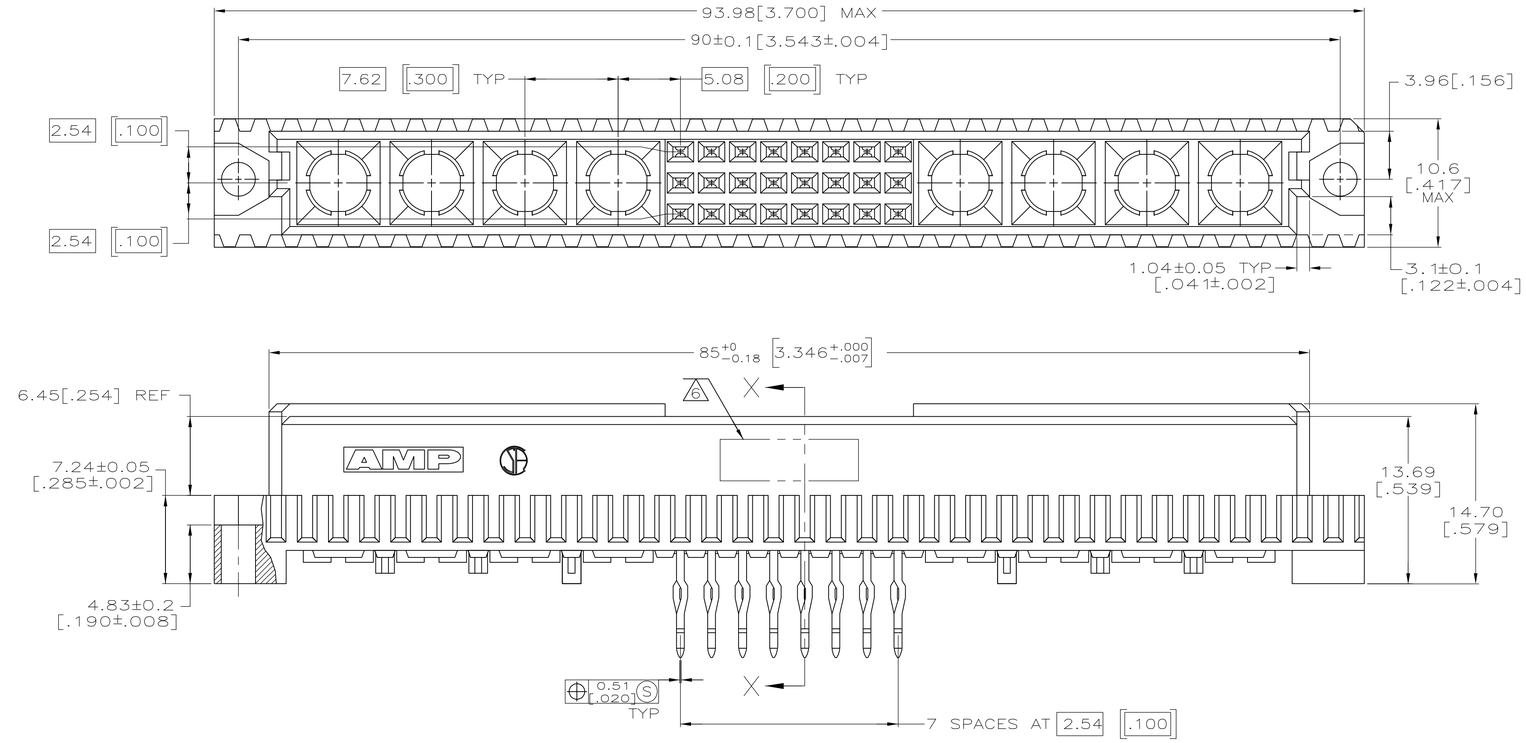

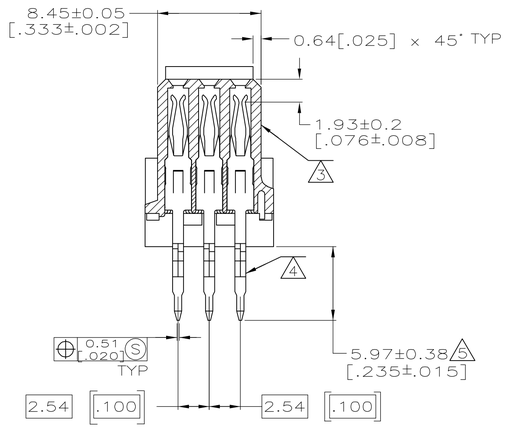

SECTION X-X

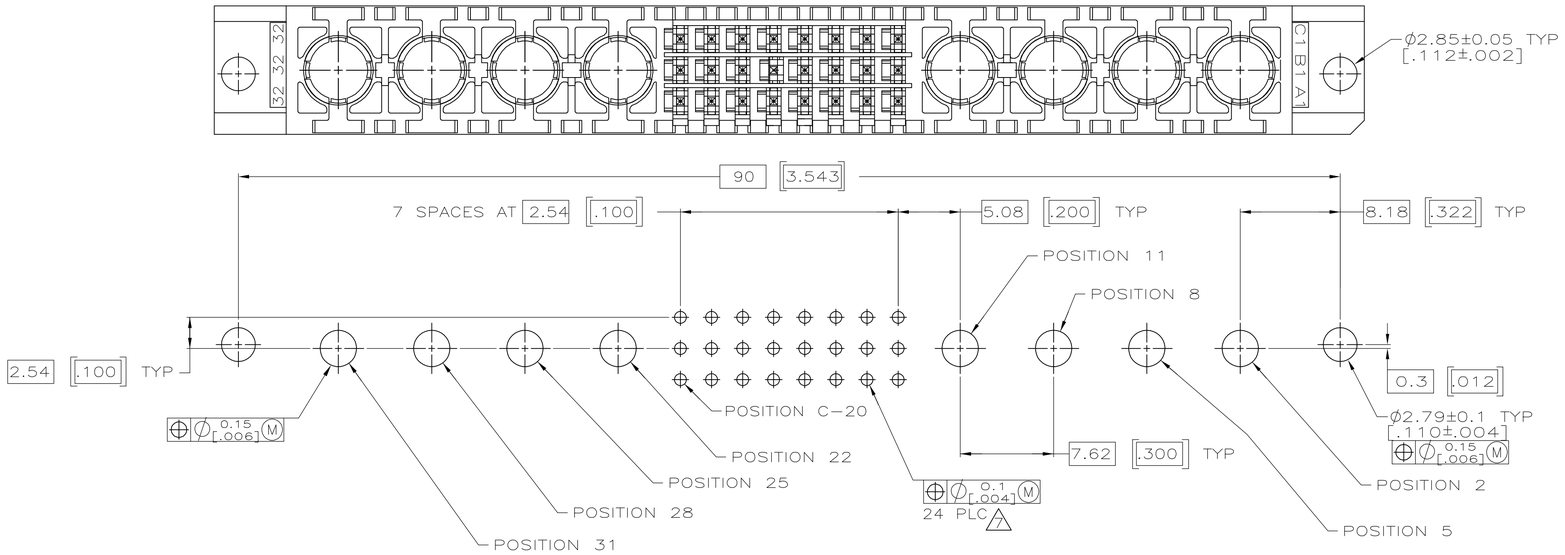

PC BOARD LAYOUT

POSITIONS LOADED	ROWS	NO. OF POWER CONTACTS LOADED	POSITIONS LOADED	ROWS	NO. OF SIGNAL CONTACTS LOADED	PART NUMBER
NONE	B	0	13-20	C	8	148700-1
			13-20	B	8	
			13-20	A	8	

THIS DRAWING IS A CONTROLLED DOCUMENT.

DIMENSIONS: mm [INCHES]

TOLERANCES UNLESS OTHERWISE SPECIFIED:
0 PLC ± -
1 PLC ± -
2 PLC ± 0.13[.005]
3 PLC ± -
4 PLC ± -
ANGLES ± -

MATERIAL 1 2
FINISH 4

DWN J. POLIGNONE 21OCT05
CHK A. SHARPE 21OCT05
APVD A. SHARPE 21OCT05
PRODUCT SPEC —
APPLICATION SPEC —
WEIGHT —

tyco Electronics
Tyco Electronics Corporation
Harrisburg, PA 17105-3608

NAME ASSEMBLY, RECEPTACLE, TYPE M, EUROCARD, 24+0/8, PRESS-FIT POSTS, 5.97[.235]

SIZE	CAGE CODE	DRAWING NO	RESTRICTED TO
A1	00779	C-148700	—

CUSTOMER DRAWING | SCALE 4:1 | SHEET 1 OF 1 | REV A