THIS DRAWING IS UNPUBLISHED. RELEASED FOR PUBLICATION -,- .
© COPYRIGHT - By - ALL RIGHTS RESERVED.

LOC	DIST
GP	00

REVISIONS

P	LTR	DESCRIPTION	DATE	DWN	APVD
	Z	REVISED PER ECO-15-011614	14AUG2015	AP	SB

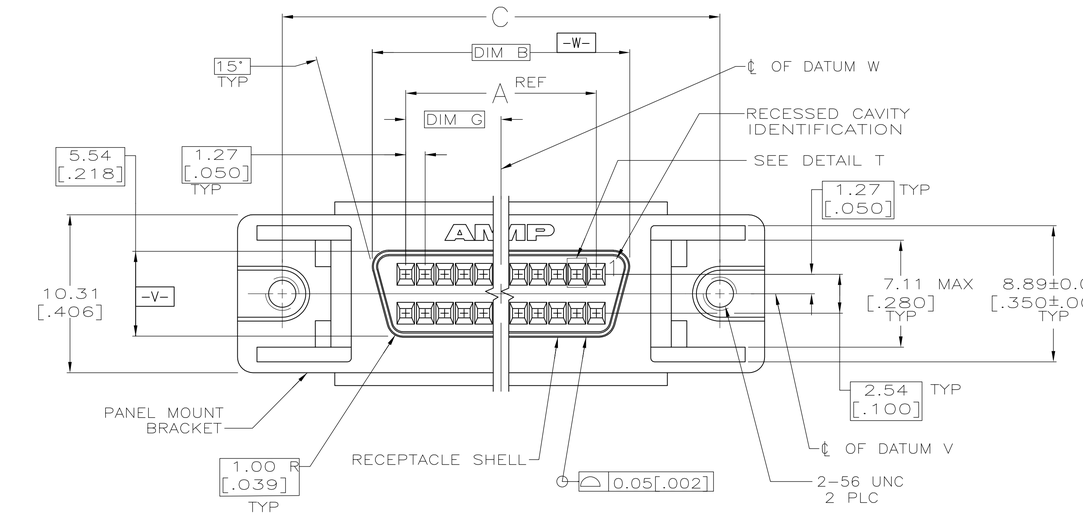

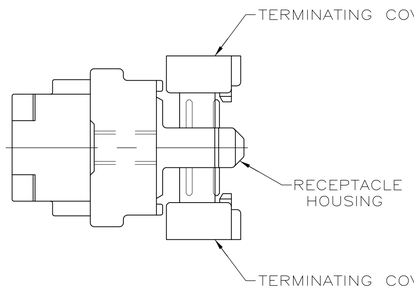

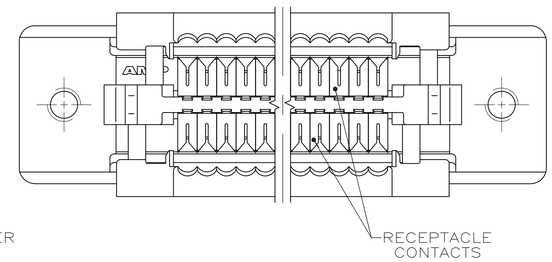

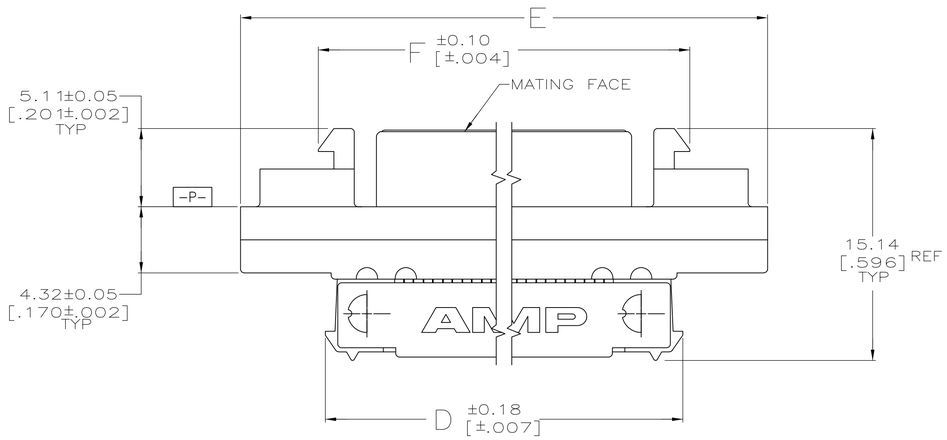

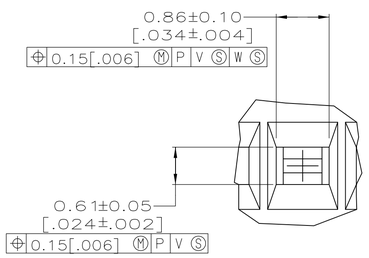

DETAIL T
SCALE 20:1
TYPICAL

			G	F	E	D	C	B	A	NO OF POSN	PART NO
	6	NO	31.12 [1.225]	74.04 [2.915]	84.20 [3.315]	73.13 [2.879]	78.23 [3.080]	66.45 [2.616]	62.23 [2.450]	100	4 5-749611-9
7 OBSOLETE	6	NO	24.76 [.975]	61.34 [2.415]	71.50 [2.815]	60.43 [2.379]	65.53 [2.580]	53.75 [2.116]	49.53 [1.950]	80	4 ~~5-749611-8~~
	6	NO	20.96 [.825]	53.72 [2.115]	63.88 [2.515]	52.81 [2.079]	57.91 [2.280]	46.13 [1.816]	41.91 [1.650]	68	4 ~~5-749611-7~~
	6	NO	15.24 [.600]	42.29 [1.665]	52.45 [2.065]	41.38 [1.629]	46.48 [1.830]	34.70 [1.366]	30.48 [1.200]	50	4 5-749611-5
OBSOLETE	6	NO	5.72 [.225]	23.24 [.915]	33.40 [1.315]	22.33 [.879]	27.43 [1.080]	15.65 [.616]	11.43 [.450]	20	4 ~~5-749611-2~~
7 OBSOLETE	6	NO	7.62 [.300]	27.05 [1.065]	37.21 [1.465]	26.14 [1.029]	31.24 [1.230]	19.46 [.766]	15.24 [.600]	26	4 ~~5-749611-1~~
	6	NO	7.62 [.300]	27.05 [1.065]	37.21 [1.465]	26.14 [1.029]	31.24 [1.230]	19.46 [.766]	15.24 [.600]	26	4 1-749611-2
	2	NO	15.24 [.600]	42.29 [1.665]	52.45 [2.065]	41.38 [1.629]	46.48 [1.830]	34.70 [1.366]	30.48 [1.200]	50	5 1-749611-1
	2	NO	37.46 [1.475]	86.74 [3.415]	96.90 [3.815]	85.83 [3.379]	90.93 [3.580]	79.15 [3.116]	74.93 [2.950]	120	5 1-749611-0
	2	NO	31.12 [1.225]	74.04 [2.915]	84.20 [3.315]	73.13 [2.879]	78.23 [3.080]	66.45 [2.616]	62.23 [2.450]	100	749611-9
	2	NO	24.76 [.975]	61.34 [2.415]	71.50 [2.815]	60.43 [2.379]	65.53 [2.580]	53.75 [2.116]	49.53 [1.950]	80	749611-8
OBSOLETE	2	NO	20.96 [.825]	53.72 [2.115]	63.88 [2.515]	52.81 [2.079]	57.91 [2.280]	46.13 [1.816]	41.91 [1.650]	68	749611-7
	2	NO	18.42 [.725]	48.64 [1.915]	58.80 [2.315]	47.73 [1.879]	52.83 [2.080]	41.05 [1.616]	36.83 [1.450]	60	5 749611-6
	2	NO	15.24 [.600]	42.29 [1.665]	52.45 [2.065]	41.38 [1.629]	46.48 [1.830]	34.70 [1.366]	30.48 [1.200]	50	749611-5
	2	NO	12.06 [.475]	35.94 [1.415]	46.10 [1.815]	35.03 [1.379]	40.13 [1.580]	28.35 [1.116]	24.13 [.950]	40	5 749611-4
	2	NO	8.26 [.325]	28.32 [1.115]	38.48 [1.515]	27.41 [1.079]	32.51 [1.280]	20.73 [.816]	16.51 [.650]	28	5 749611-3
OBSOLETE	2	NO	5.72 [.225]	23.24 [.915]	33.40 [1.315]	22.33 [.879]	27.43 [1.080]	15.65 [.616]	11.43 [.450]	20	~~749611-2~~
	2	NO	7.62 [.300]	27.05 [1.065]	37.21 [1.465]	26.14 [1.029]	31.24 [1.230]	19.46 [.766]	15.24 [.600]	26	749611-1
	FINISH	DATE CODE									

1. MATERIAL:
RECEPTACLE CONTACTS- PHOSPHOR BRONZE.
RECEPTACLE SHELL- STEEL.
PANEL MOUNT BRACKET- ZINC.
RECEPTACLE HOUSING AND TERMINATION COVERS- UL V-0 RATED THERMOPLASTIC, COLOR: BLACK.

2. PLATING:
RECEPTACLE CONTACTS- EITHER 0.76μm [.000030] MIN GOLD PLATE OR GOLD FLASH OVER PALLADIUM NICKEL PLATE, 0.76μm [.000030] MIN TOTAL IN CONTACT AREA, 1.27μm [.000050] MIN TIN-LEAD IN TERMINATION AREA, ALL OVER 1.27μm [.000050] MIN NICKEL.
RECEPTACLE SHELL- 5.08μm [.000200] MIN NICKEL OVER 1.27μm [.000050] MIN COPPER.
PANEL MOUNT BRACKET- 5.08μm [.000200] MIN NICKEL OVER 7.62μm [.000300] MIN COPPER.

3. RECOMMENDED WIRE:
28 AWG OR 30 AWG, SOLID OR 7 STRANDED, PVC INSULATION WITH A 0.74-0.91 [.029-.036] INSULATION DIA.

4. ROHS 2002/95/EC COMPLIANT

5. OBSOLETE PART NUMBER.

6. PLATING:
RECEPTACLE CONTACTS- EITHER 0.76μm [.000030] MIN GOLD PLATE OR GOLD FLASH OVER PALLADIUM NICKEL PLATE, 0.76μm [.000030] MIN TOTAL IN CONTACT AREA, 1.27μm [.000050] MIN TIN IN TERMINATION AREA, ALL OVER 1.27μm [.000050] MIN NICKEL.
RECEPTACLE SHELL- 5.08μm [.000200] MIN NICKEL OVER 1.27μm [.000050] MIN COPPER.
PANEL MOUNT BRACKET- 5.08μm [.000200] MIN NICKEL OVER 7.62μm [.000300] MIN COPPER.

7. OBSOLETE PARTS: OBSOLETE CIS STREAMLINING PER D.RENAUD/D.SINISI

THIS DRAWING IS A CONTROLLED DOCUMENT.

DIMENSIONS: INCHES

TOLERANCES UNLESS OTHERWISE SPECIFIED:
0 PLC ± -
1 PLC ± -
2 PLC ± 0.13 [.005]
3 PLC ± -
4 PLC ± -
ANGLES ± -

MATERIAL 1

FINISH SEE TABLE

DWN M.MCCAFFREY 08/25/89
CHK J.BROSCHARD 09/05/89
APVD R.WHITEMAN 10/24/89

PRODUCT SPEC 108-1228
APPLICATION SPEC 114-40029
WEIGHT -

CUSTOMER DRAWING

TE Connectivity

NAME RECEPTACLE CABLE ASSEMBLY, PANEL MOUNT, AMPLIMITE .050 Series

SIZE	CAGE CODE	DRAWING NO	RESTRICTED TO
A1	00779	C-749611	-

SCALE 5:1 SHEET 1 OF 1 REV Z

4805 (3/11)