THIS DRAWING IS UNPUBLISHED. RELEASED FOR PUBLICATION
© COPYRIGHT BY TYCO ELECTRONICS CORPORATION. ALL RIGHTS RESERVED.

LOC	DIST
J	–

REVISIONS

P	LTR	DESCRIPTION	DATE	DWN	APVD
	0	RELEASED FJD0-0013-03	22FEB2003	T.H	M.S
	01	REVISED PER ECO-09-024717	02DEC09	KK	AEG

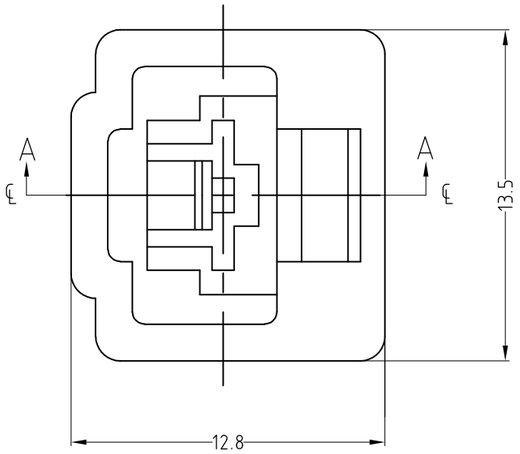

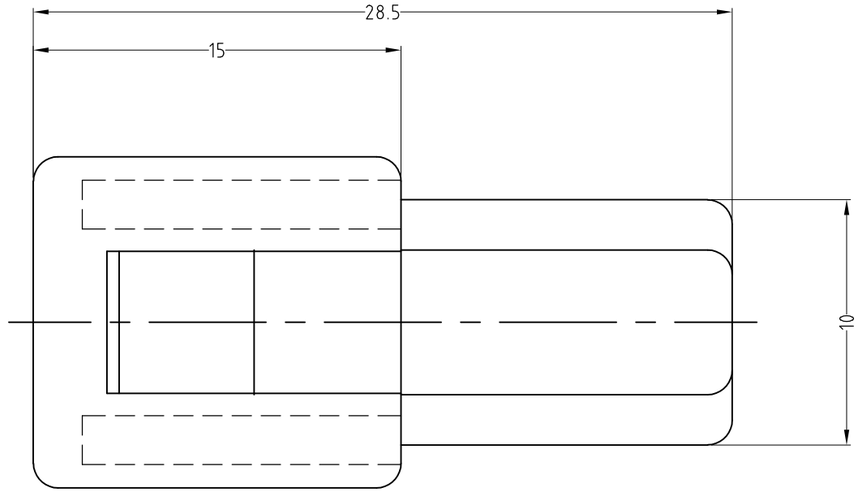

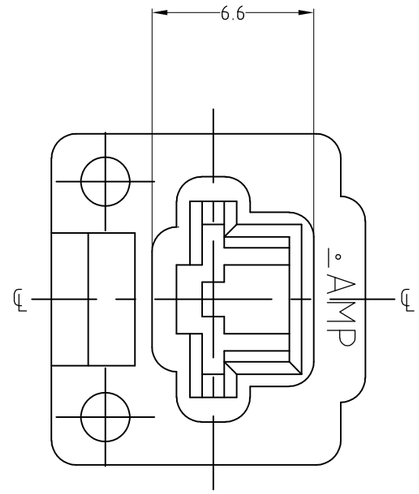

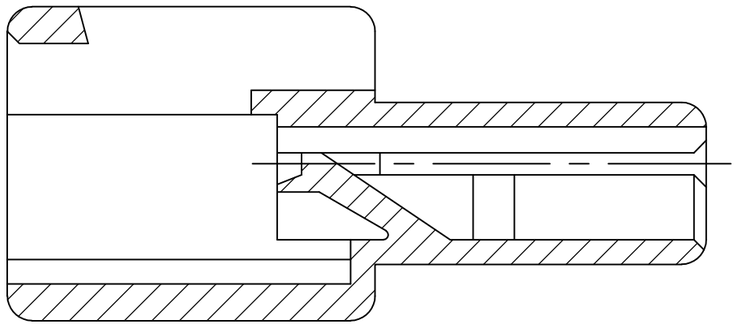

SECTIONA-A

	COLOR	PARTS NUMBER
	RED	174195-9
	ORANGE	174195-8
	YELLOW	174195-7
	GRAY	174195-6
3 OBSOLETE	BLUE	~~174195-5~~
	GREEN	174195-4
	BROWN	174195-3
	BLACK	174195-2
	NATURAL	174195-1

NOTES.
1. THE MATING PLUG HOUSING PART NUMBER : 174196
2. APPLICABLE CONTACT PART NUMBER : 170349 , 170340, 170341
3. OBSOLETE PARTS: OBSOLETE CIS STREAMLINING PER D.RENAUD/D.SINISI

THIS DRAWING IS A CONTROLLED DOCUMENT.

DIMENSIONS: MM	TOLERANCES UNLESS OTHERWISE SPECIFIED: ±0.3
MATERIAL 66 NYLON	FINISH –

DWN	: BH CHO	09JAN2003
CHK	: BW KANG	09JAN2003
APVD	: CS LEE	09JAN2003
PRODUCT SPEC	–	
APPLICATION SPEC	–	
WEIGHT	–	

CUSTOMER DRAWING

tyco Electronics
Tyco Electronics AMP K.K.
Kawasaki, Japan

NAME
1 P CAP HOUSING
250 SERIES HOUSING LANCE CONNECTOR

SIZE	CAGE CODE	DRAWING NO	RESTRICTED TO
A3	00779	C- 174195	–

SCALE 4:1 SHEET 1 OF 1 REV 01