Alle Rechte vorbehalten/ *All rights reserved*

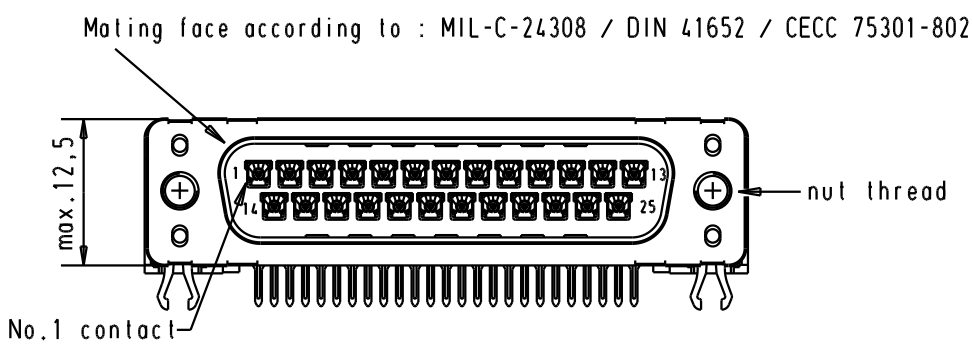


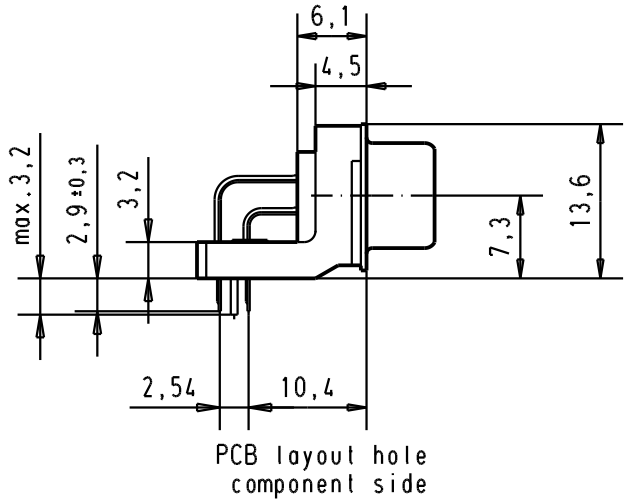


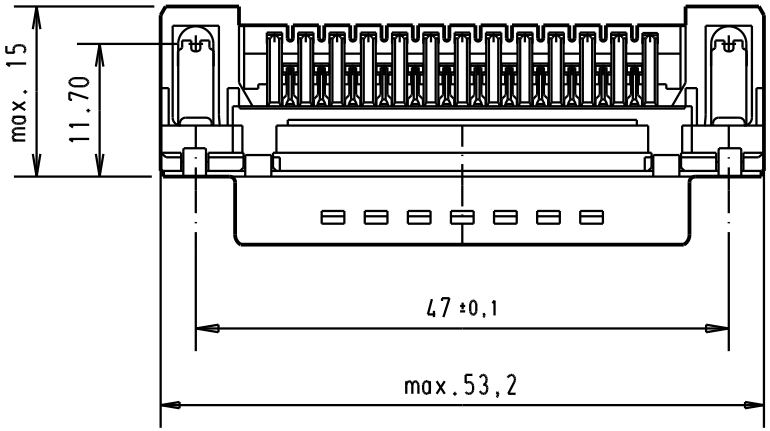


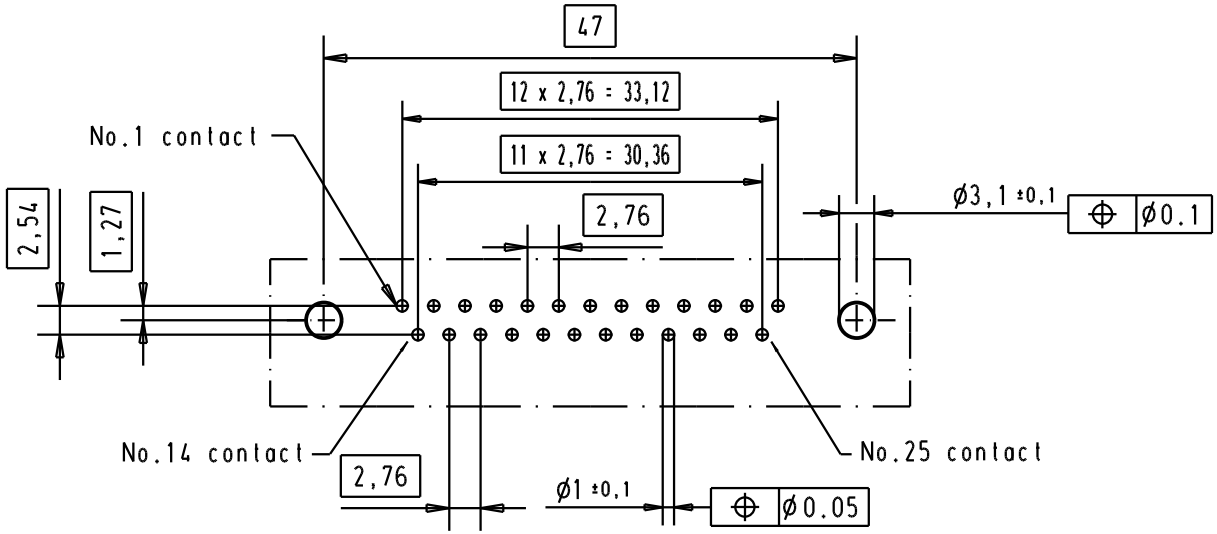


Connector retention and insertion forces on the PCB = 25 / 80 newtons

| Part number | Nut thread | Performance level | Mod. | Dat. | Name |
|---|---|---|---|---|---|
| 09 65 366 3811 | M3 | 1 | | | |
| 09 65 366 6811 | M3 | 2 | | | |
| 09 65 366 7811 | M3 | 3 | | | |
| 09 65 366 3812 | 4-40 UNC | 1 | 31892 | 22/04/04 | JH |
| 09 65 366 6812 | 4-40 UNC | 2 | 29723 | 05-MAR-02 | CV |
| 09 65 366 7812 | 4-40 UNC | 3 | 29750 | 15-FEB-02 | JB |

| | Dat. | Name |
|---|---|---|
| Detail. | 15-FEB-02 | JB |
| Insp. | | |
| Stand. | | |

All Dim. in mm
Orig. Size DIN A 4

D-Sub, High temperature, male, standard, 25 poles with solder pins 2,9mm, nuts and grounding board lock.

Maßstab/ *Scale* 1.5:1

HARTING EURL
F-95972 Paris

TB 0965366x81x

Sub.

Blatt/ *Page* 1/