~~THIS DRAWING IS UNPUBLISHED.~~ RELEASED FOR PUBLICATION 9 DEC ,1991.
© COPYRIGHT 1991 By – ALL RIGHTS RESERVED.

LOC	DIST
—	—

REVISIONS

P	LTR	DESCRIPTION	DATE	DWN	APVD
	AM7	REVISE PER ECR-17-010701	31JULY2017	DT	TD

SECT. C–C

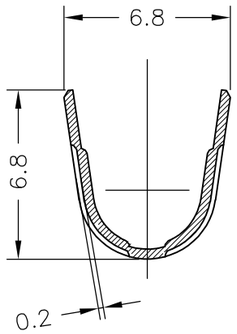

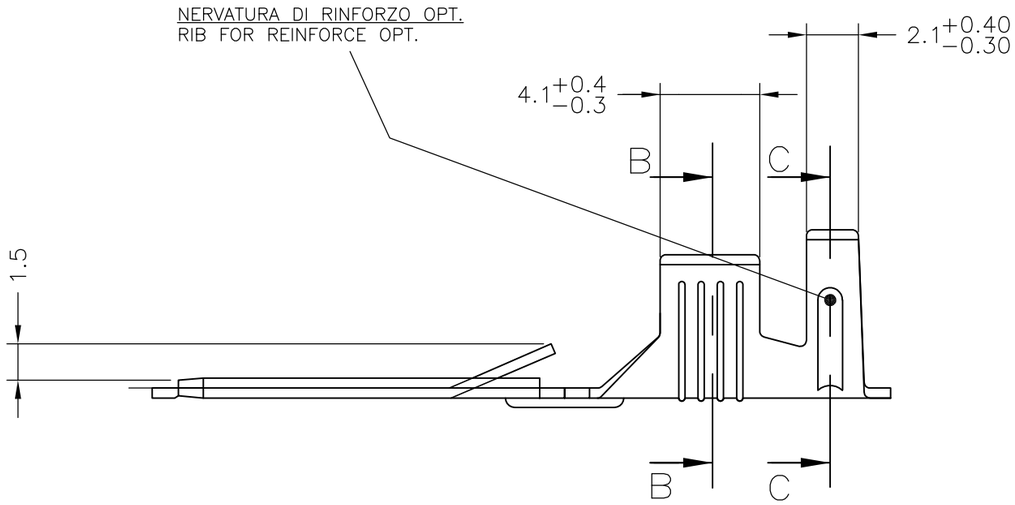

SECT. B–B

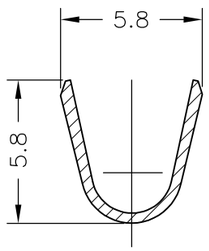

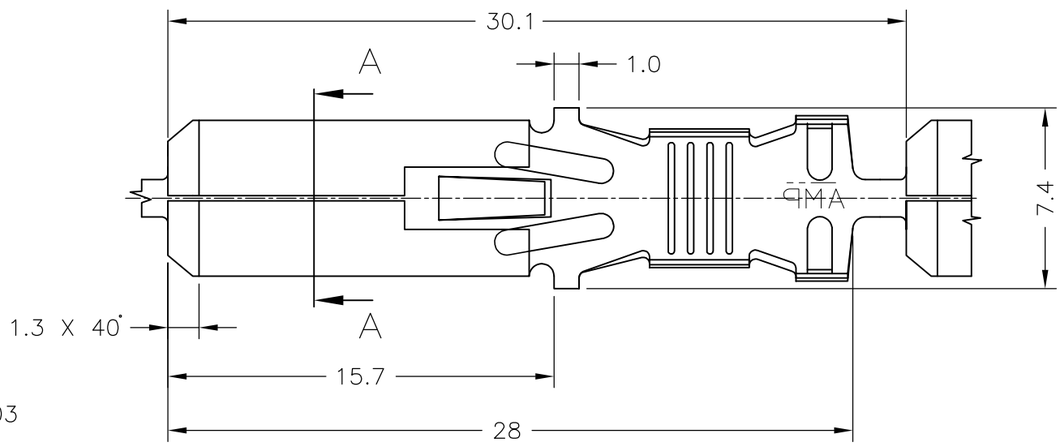

SECT. A–A

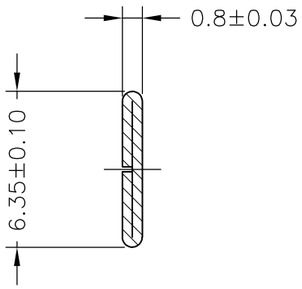

SENSO DI USCITA DALLA BOBINA
REEL OUT DIRECTION

1. NON DISPONIBILE DALL TE ITALIA [NOT AVAILABLE FROM TE ITALY]
2. BOBINATO SU BOBINA 13" CON CARTA INTERPOSTA TRA LE SPIRE [REELED ON 13" CARTON REEL WITH INTERLAYER PAPER STRIP]
3. BOBINATO SU BOBINA 10 1/2" CON CARTA INTERPOSTA TRA LE SPIRE [REELED ON 10 1/2" CARTON REEL WITH INTERLAYER PAPER STRIP]
4. BOBINATO SU BOBINA 12" CON CARTA INTERPOSTA TRA LE SPIRE [REELED ON 12" CARTON REEL WITH INTERLAYER PAPER STRIP]
5. OBSOLETE PARTS: OBSOLETE CIS STREAMLINING PER D.RENAUD/D.SINISI

5	OBSOLETE	–	OTTONE/ BRASS	~~1-180352-9~~ 3
5	OBSOLETE	1-180352-2	OT.STAG./ BRASS TINNED	~~1-180352-8~~ 1 3
5	OBSOLETE	1-180409-7	OT.PRE-ST./ BR.PRE-TIN	~~1-180352-7~~ 1 3
5	OBSOLETE	1-180409-6	OT.ARGENT/ BR. SILVERED	~~1-180352-6~~ 1 3
5	OBSOLETE	1-180409-5	BR.FOSF.ST/ PH.BR TINNED	~~1-180352-5~~ 1 3
5	OBSOLETE	1-180409-4	BR.FOSF.ARG./ PH.BR. SILVER	~~1-180352-4~~ 1 3
5	OBSOLETE	1-180409-3	BRONZO FOSF./ PHOS. BR	~~1-180352-3~~ 1 3
5	OBSOLETE	1-180409-2	OT.STAG./ BR.TINNED	~~1-180352-2~~ 1 3
5	OBSOLETE	1-180409-1	OTTONE/ BRASS	~~1-180352-1~~ 1 3
5	OBSOLETE	180409-6	OT.ARGENT. / BR.SILVERED	~~180352-9~~ 1 2
	OBSOLETE	~~180409-2~~	~~OT. STAG. / BR.TINNED~~	~~180352-8~~ 1 2
5	OBSOLETE	180409-7	OT.PRE-ST / BR. PRE-TIN	~~180352-7~~ 1 3
		180409-6	OT.ARGENT/ BR. SILVERED	180352-6 4
	OBSOLETE	~~180409-5~~	BR.FOSF.ST/PH.BR.TINNED	180352-5
	OBSOLETE	~~180409-4~~	~~BR.FOSF.ARG./PH.BR.SILVER~~	~~180352-4~~
	OBSOLETE	~~180409-3~~	BRONZO FOSF./ PHOS.BR	180352-3
		180409-2	OTT. PRE-STAG/BR.PRE-TIN	180352-2 4
		180409-1	OTTONE / BRASS	180352-1 4
		LOOSE PIECE NO.	MATERIALE / FINITURA MATERIAL / FINISH	NUMERO /PART NO.

THIS DRAWING IS A CONTROLLED DOCUMENT.

DIMENSIONS: mm

TOLERANCES UNLESS OTHERWISE SPECIFIED:

0 PLC	± –
1 PLC	± 0.3
2 PLC	± –
3 PLC	± –
4 PLC	± –
ANGLES	± 2°

RANGO FILO (WIRE RANGE) 4–6 mm²

DIAM. ISOLANTE (INS. DIA. RANGE) 3.4–5.1

MATERIAL –

FINISH SEE TABLE

DWN P.VERGANO 12-09-91
CHK –
APVD –
PRODUCT SPEC 108-20020
APPLICATION SPEC 114-2025
WEIGHT

TE Connectivity

NAME FASTIN-ON TAB .250 SRS

SIZE A3 | CAGE CODE 00779 | DRAWING NO C-180352 | RESTRICTED TO —

CUSTOMER DRAWING | SCALE 4:1 | SHEET 1 OF 1 | REV AM7

1470-19 (3/11)