PART NUMBER	SEE SHEET 2

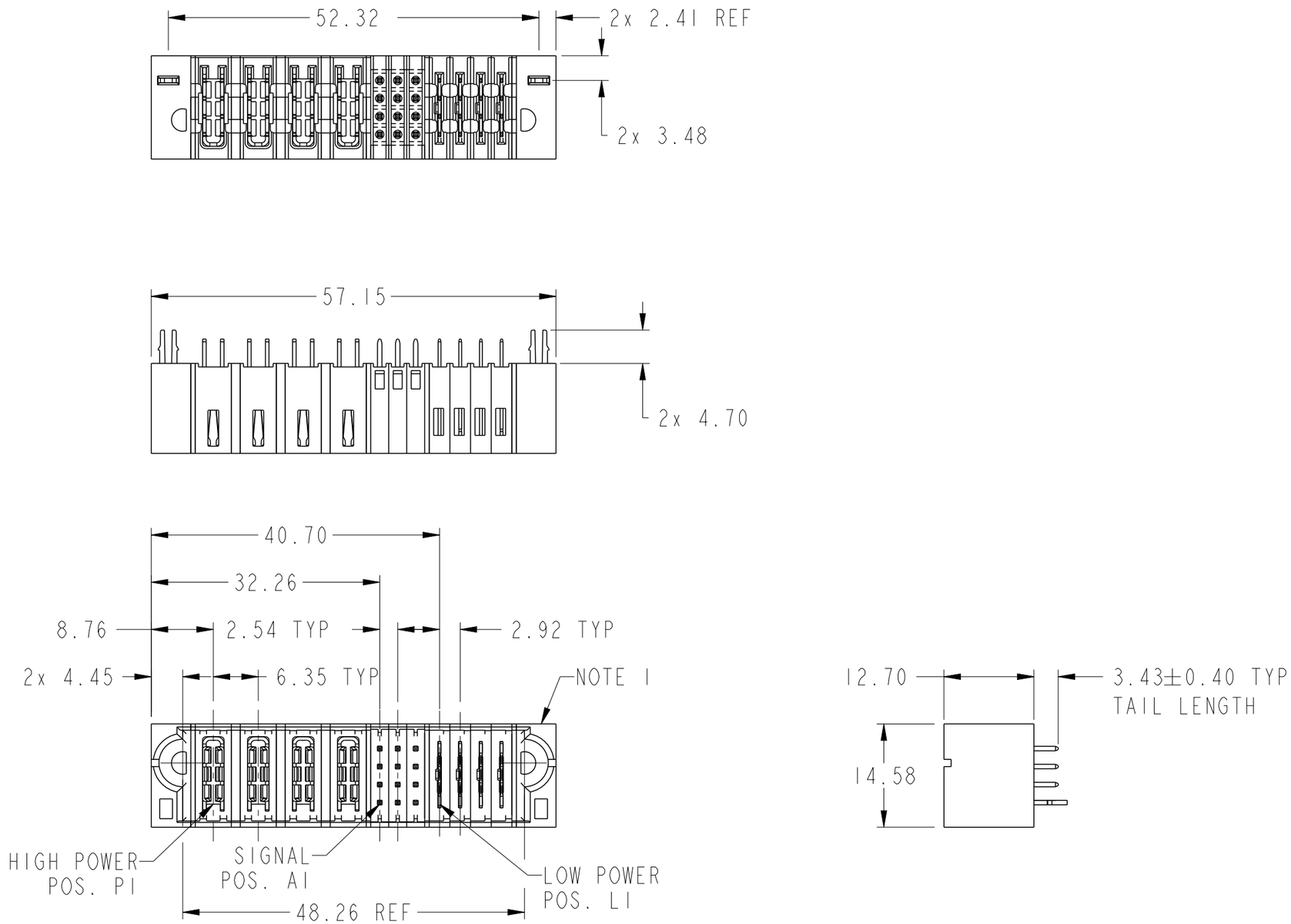

spec ref	*			dr	Peng-Bing Fu	2012/09/07	projection	MM	size A3	scale 3:2
tolerance std ASME Y14.5	TOLERANCES UNLESS OTHERWISE SPECIFIED			eng	Rainbow Zhan	2014/08/15			ecn no	-
				chr	Li- He	2014/08/14				
				appr	Pei-Ming Zheng	2014/08/15	product family	PwrBlade+	rel level	Released
surface ✓	linear	0.X	±0.5	FCI	title	4HP + 12S + 4LP VERTICAL STB HEADER	dwg no	10106128-4403001	rev A
		0.XX	±0.25						
		0.XXX	±0.10						
ASME Y14.5	angular	0°	±2°	www.fci.com	cat. no.		Product - Customer Drw		sheet 1 of 3

Copyright FCI.

PRODUCT NO.	ROWS		HIGH POWER				S			LP				
		E1	P1	P2	P3	P4	1	2	3	P5	P6	P7	P8	E2
10106128-4403001LF	D C B A	HA	HI	HI	HI	HI	E E H E E H E E H E E H			LM	LJ	LM	LJ	HA

CODE	DESCRIPTION
E	STD SIGNAL CONTACT
H	MLBF SIGNAL CONTACT
HI	STD HIGH POWER CONTACT
HA	METAL HOLD DOWN
LJ	STD LOW POWER CONTACT
LM	MFBL LOW POWER CONTACT

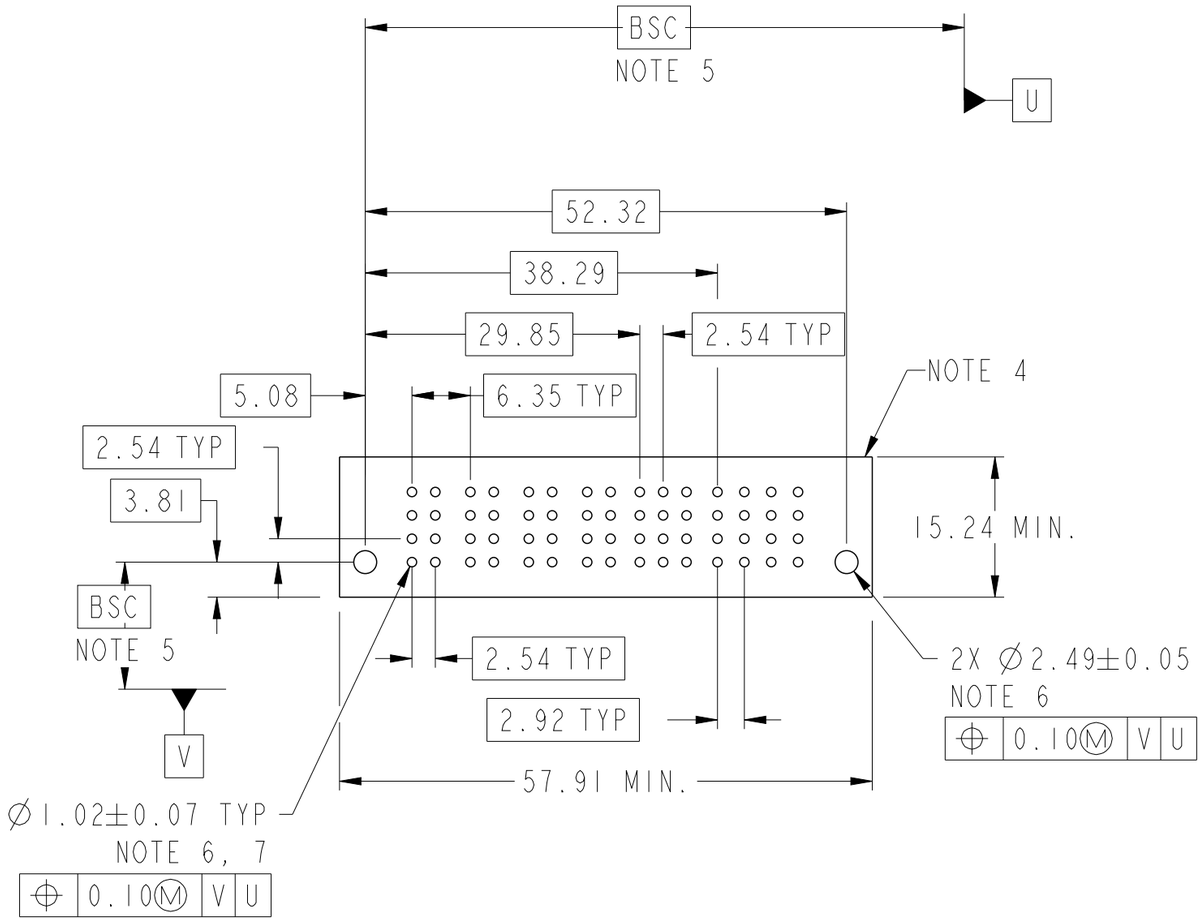

dr	Peng-Bing Fu	2012/09/07	projection	MM	size A3	scale 3:2
eng	Rainbow Zhan	2014/08/15			ecn no	-
chr	Li- He	2014/08/14				
appr	Pei-Ming Zheng	2014/08/15	product family	PwrBlade+	rel level	Released

title	4HP + 12S + 4LP VERTICAL STB HEADER	dwg no	10106128-4403001	rev A
www.fci.com	cat. no.	Product - Customer Drw	sheet 2 of 3

Copyright FCI.

NOTES:

1) "FCI", PART NUMBER AND DATE CODE TO BE MARKED ON THIS SURFACE.
   THE MARK CAN BE OMITTED IF THERE IS NOT ENOUGH SPACE ON THIS SURFACE.

2) MATERIALS:
   -HOUSING - GLASS FILLED WITH HIGH TEMP THERMOPLASTIC, UL94V-0.
   -SIGNAL CONTACT - COPPER ALLOY.
   -POWER CONTACT - HIGH CONDUCTIVITY COPPER ALLOY.

3) PLATING SPECIFICATION REFER TO FCI 10116351

4) DENOTES CONNECTOR KEEP OUT ZONE.

5) DATUM AND BASIC DIMENIONS WERE ESTABLISHED BY CUSTOMER.

6) ALL HOLE DIAMETERS ARE FINISHED HOLE SIZES.

7) 1.15±0.025MM DRILLED HOLE PLATED WITH 0.00762MM MIN Sn
   OVER 0.0254-0.0762MM Cu PLATING TO ACHIEVE A 1.02±0.07MM HOLE.

8) PRODUCT SPECIFICATION REFER TO FCI GS-12-658.
   APPLICATION SPECIFICATION REFER TO FCI GS-20-141.
   PRODUCT PACKAGED IN TRAYS, REFER TO FCI GS-14-1502.

Copyright FCI.

dr	Peng-Bing Fu	2012/09/07	projection	MM	size A3	scale 3:2
eng	Rainbow Zhan	2014/08/15				
chr	Li- He	2014/08/14			ecn no	-
appr	Pei-Ming Zheng	2014/08/15	product family	PwrBlade+	rel level	Released
title	4HP + 12S + 4LP VERTICAL STB HEADER		dwg no	10106128-4403001	rev	A
www.fci.com	cat. no.		Product - Customer Drw		sheet 3 of 3	