REV.	DATE	DESCRIPTION
A	01/30/04	UPDATE DRAWING FORMAT
B	11/08/05	ADD BODY BODY DIMENSION OF 22mm

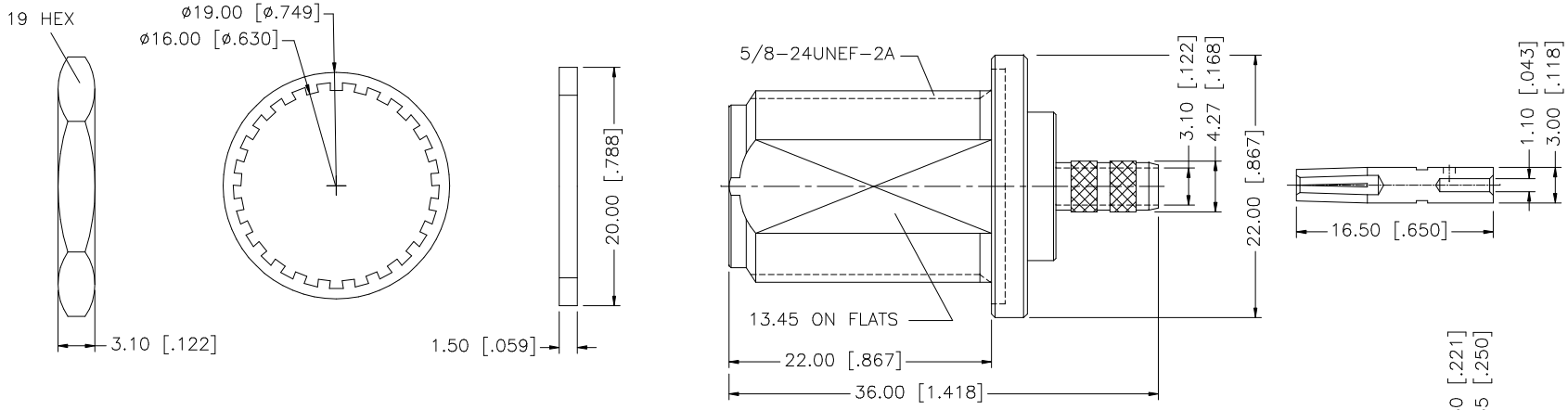

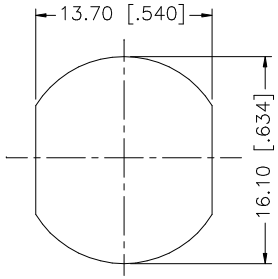

RECOMMENDED MOUNTING HOLE DIMENSIONS

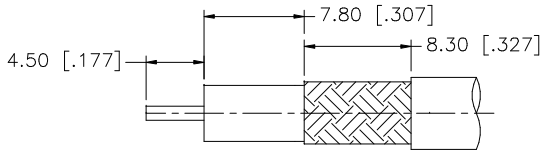

RECOMMENDED CABLE STRIPPING DIM'S

NOTES:

1. CRIMPED FERRULE HEX CRIMP SIZE .213"
2. CRIMPED CONTACT PIN HEX CRIMP SIZE .100"
3. MAX. PANEL THICKNESS = 6.5mm
4. RETURN LOSS: 22dB UP TO 4 GHz

	DESCRIPTION	MATERIAL	FINISH	QTY
8				
7	FERRULE	COPPER	NEXCOTE	1
6	GASKET	SILICONE	RED	1
5	HEX NUT	BRASS	NEXCOTE	1
4	LOCK WASHER	BRASS	NEXCOTE	1
3	CONTACT PIN	PHOS. BRONZE	GOLD	1
2	INSULATOR	TEFLON	NATURAL	1
1	BODY	BRASS	NEXCOTE	1

UNLESS OTHERWISE SPECIFIED DIMENSIONS ARE IN MILLIMETERS. DIMENSIONS IN [ ] ARE IN INCHES AND FOR CUSTOMER REFERANCE ONLY.

UNLESS OTHERWISE SPECIFIED TOLERANCES FOR MILLIMETERS ARE:
0.5 – 8mm ± 0.20mm
8 – 30mm ± 0.40mm
30 – 120mm ± 0.50mm

UNLESS OTHERWISE SPECIFIED TOLERANCES FOR INCHES ARE:
.020 – .315 = ± 0.007"
.315 – 1.180 = ± 0.015"
1.180 – 4.724 = ± 0.020"

DO NOT SCALE DRAWING

APPROVALS		DATE
DRAWN	G.R.S.	11/08/05
CHECKED		
ISSUED		
SHEET	1 OF 1	
CAD FILE	C:/172/172132.DWG	

Amphenol Connex

PART DESCRIPTION
N BULKHEAD CRIMP JACK
(FOR RG–55/U, 142A/U, 223/U, 400/U)

PART NO. 172132

DWG. NO.	REV.	SIZE	SCALE
172132.DWG	B	A	NA