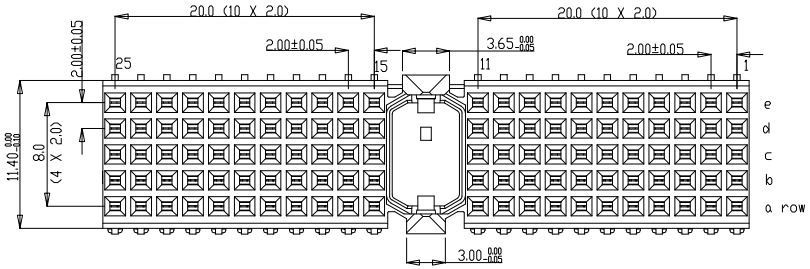

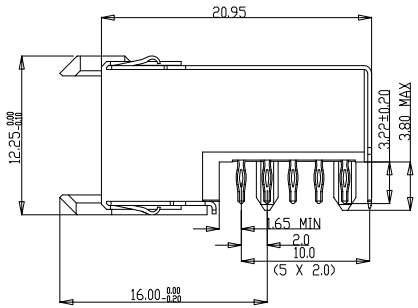

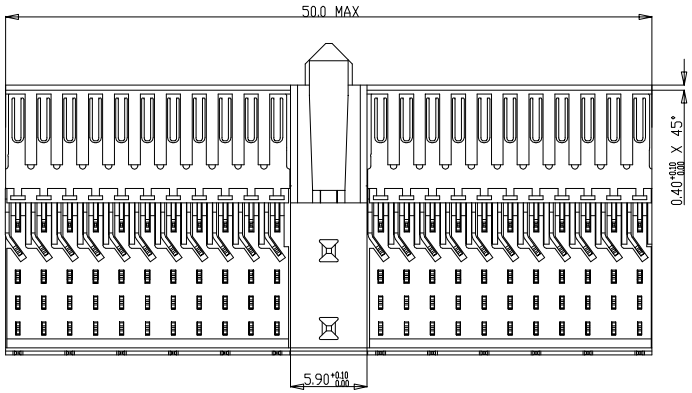

PERFORMANCE CHARACTERISTICS

CURRENT RATING 1.5 A AT 20°C (FULLY LOADED)
1 A AT 70°C (FULLY LOADED)

RATED VOLTAGE 500V AC (CONT / CONT)

OPERATING TEMPERATURE -55°C TO 125°C

CONTACT RESISTANCE 20 M Ω MAX

INSERTION FORCE :0.75 N MAX /CONT

EXTRACTION FORCE: 0.15 N MIN /CONT

INSULATION RESISTANCE :10^4 MΩ MIN

NOTES

1. LEAD FREE INDICATOR : LF- LEAD FREE
   PERFORMANCE LEVEL INDICATIOR
   (REF DWG No. BS,C,201844,003)
2. THIS PRODUCT IS CSA APPROVED
   THIS PRODUCT IS UL RECOGNISED
3. FOR RECOMMENDED PTH DIMENSIONS REFER DRAWING: BSA,201,572001
4. THIS PRODUCT (LF) MEETS EUROPEAN UNION DIRECTIVE
   AND OTHER COUNTRY REGULATIONS AS DESCRIBED IN GS-22-008.

LAY OUT
P.C.B.-HOLE

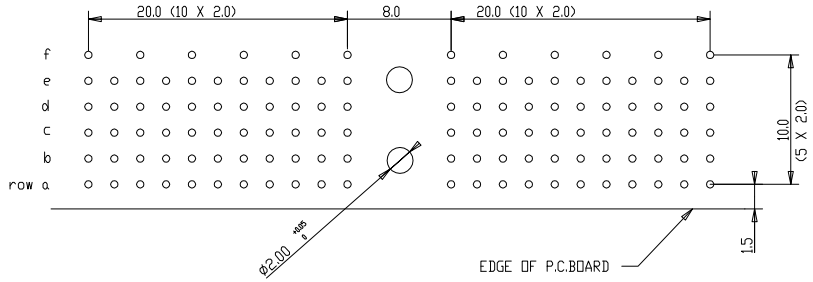

rev	ecn no	dr	date
A	CONVERSION VISION 03	KN	14-9-01
B	IEG05-0278	Guo.JM	03/08/05
C	IEG07-0362	Kason	05/09/07
D	IEG10-0010	NZ	05/30/10
-	-	-	-
-	-	-	-
05	IEC 9.3546	RM	110601

Material		Spec ref	
Mat code			
Heattreat			
Plating/Finish			
Dr	06 09 05	W.Panis	
Eng			
Chr			
Appr			

tolerance: DEC ± 0.2 DEC DEC ± 0.1 DEC ANGLES ± 1° MACHIN

projection: MM

size: A1 Scale: 5.000

Product family: MILLIPACS
Model Name: HM2R01PA5101----
Model Revision
ECN
REL Level

title: MPACS 5+2R RA RCP CONN TYPE A

dwg no: BS,C,201444,013 Rev. D

Pro/E file | catalog no: HM2R01PA5102---- | CUSTOMER DRAWING | sheet 1 of 1

Tous droits réservés. Reproduction ou communication à des tiers, interdite sans autorisation écrite du propriétaire.
All rights reserved. Reproduction or issue to third parties in any form whatsoever is not permitted without written authority from the proprietor.