X5043, X5045

4K, 512 x 8 Bit CPU Supervisor with 4K SPI EEPROM

FN8126
Rev 3.00
September 23, 2015

These devices combine four popular functions, Power-on Reset Control, Watchdog Timer, Supply Voltage Supervision, and Block Lock Protect Serial EEPROM Memory in one package. This combination lowers system cost, reduces board space requirements, and increases reliability.

Applying power to the device activates the power-on reset circuit which holds $\overline{\text{RESET}}$/RESET active for a period of time. This allows the power supply and oscillator to stabilize before the processor executes code.

The Watchdog Timer provides an independent protection mechanism for microcontrollers. When the microcontroller fails to restart a timer within a selectable time out interval, the device activates the $\overline{\text{RESET}}$/RESET signal. The user selects the interval from three preset values. Once selected, the interval does not change, even after cycling the power.

The device's low V_{CC} detection circuitry protects the user's system from low voltage conditions, resetting the system when V_{CC} falls below the minimum V_{CC} trip point. $\overline{\text{RESET}}$/RESET is asserted until V_{CC} returns to proper operating level and stabilizes. Four industry standard V_{TRIP} thresholds are available, however, Intersil's unique circuits allow the threshold to be reprogrammed to meet custom requirements or to fine-tune the threshold for applications requiring higher precision.

The memory portion of the device is a CMOS Serial EEPROM array with Intersil's block lock protection. The array is internally organized as 512 x 8. The device features a Serial Peripheral Interface (SPI) and software protocol allowing operation on a simple four-wire bus.

The device utilizes Intersil's proprietary Direct Write™ cell, providing a minimum endurance of 100,000 cycles and a minimum data retention of 100 years.

Features

- Low V_{CC} Detection and Reset Assertion
  - Four standard reset threshold voltages 4.63V, 4.38V, 2.93V, 2.63V
  - Re-program low V_{CC} reset threshold voltage using special programming sequence.
  - Reset signal valid to V_{CC} = 1V
- Selectable Time Out Watchdog Timer
- Long Battery Life with Low Power Consumption
  - <50µA max standby current, watchdog on
  - <10µA max standby current, watchdog off
- 4Kbits of EEPROM–1M Write Cycle Endurance
- Save Critical Data with Block Lock™ Memory
  - Protect 1/4, 1/2, all or none of EEPROM array
- Built-in Inadvertent Write Protection
  - Write enable latch
  - Write protect pin
- SPI Interface - 3.3MHz Clock Rate
- Minimize Programming Time
  - 16-byte page write mode
  - 5ms write cycle time (typical)
- Available Packages
  - 8 Ld MSOP, 8 Ld SOIC, 8 Ld PDIP
  - 14 Ld TSSOP
- Pb-Free Plus Anneal Available (RoHS Compliant)

Applications

- Communications Equipment
  - Routers, Hubs, Switches
  - Set Top Boxes
- Industrial Systems
  - Process Control
  - Intelligent Instrumentation
- Computer Systems
  - Desktop Computers
  - Network Servers
- Battery Powered Equipment

Typical Application

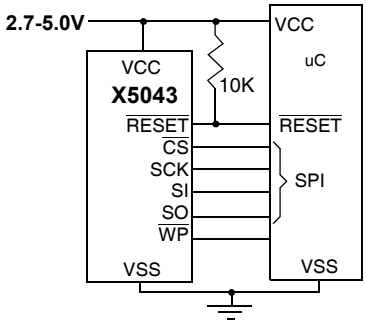

Block Diagram

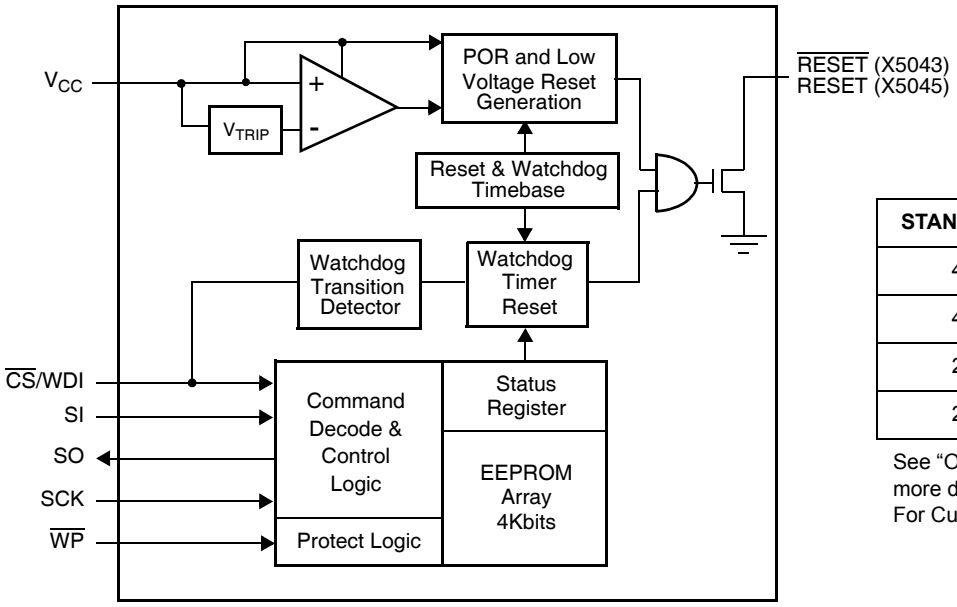

X5043, X5045

STANDARD V_{TRIP} LEVEL	SUFFIX
4.63V (+/-2.5%)	-4.5A
4.38V (+/-2.5%)	-4.5
2.93V (+/-2.5%)	-2.7A
2.63V (+/-2.5%)	-2.7

See “Ordering Information” on page 3. for more details
For Custom Settings, call Intersil.

Ordering Information

PART NUMBER RESET (ACTIVE LOW)	PART MARKING	PART NUMBER RESET (ACTIVE HIGH)	PART MARKING	V_{CC} RANGE	V_{TRIP} RANGE	TEMP RANGE (°C)	PACKAGE
X5043PZ-4.5A (Note)	X5043P Z AL	X5045PZ-4.5A (Note)	X5045P Z AL	4.5-5.5V	4.5-4.75	0 to 70	8 Ld PDIP (Pb-free)
X5043PIZ-4.5A (Note)	X5043P Z AM	X5045PIZ-4.5A (Note)	X5045P Z AM			-40 to 85	8 Ld PDIP (Pb-free)
X5043S8Z-4.5A (Note)	X5043 Z AL	X5045S8Z-4.5A (Note)	X5045 Z AL			0 to 70	8 Ld SOIC (Pb-free)
X5043S8IZ-4.5A* (Note)	X5043 Z AM	X5045S8IZ-4.5A* (Note)	X5045 Z AM			-40 to 85	8 Ld SOIC (Pb-free)
X5043M8Z-4.5A (Note)	DBS	X5045M8Z-4.5A (Note) **(No longer available, recommended replacement: X5045S8Z-4.5A)**	DCB			0 to 70	8 Ld MSOP (Pb-free)
X5043M8IZ-4.5A (Note)	DBM	X5045M8IZ-4.5A (Note) **(No longer available, recommended replacement: X5045S8IZ-4.5A)**	DBX			-40 to 85	8 Ld MSOP (Pb-free)
X5043PZ (Note)	X5043P Z	X5045PZ (Note)	X5045P Z		4.25-4.5	0 to 70	8 Ld PDIP (Pb-free)
X5043PIZ (Note)	X5043P Z I	X5045PIZ (Note)	X5045P Z I			-40 to 85	8 Ld PDIP (Pb-free)
X5043S8Z* (Note)	X5043 Z	X5045S8Z* (Note)	X5045 Z			0 to 70	8 Ld SOIC (Pb-free)
X5043S8IZ* (Note)	X5043 Z I	X5045S8IZ* (Note)	X5045 Z I			-40 to 85	8 Ld SOIC (Pb-free)
X5043M8Z (Note)	DBN	X5045M8Z (Note) **(No longer available, recommended replacement: X5045S8Z)**	DBY			0 to 70	8 Ld MSOP (Pb-free)
X5043M8IZ (Note)	DBJ	X5045M8IZ (Note) **(No longer available, recommended replacement: X5045S8IZ-2.7)**	DBT			-40 to 85	8 Ld MSOP (Pb-free)
X5043V14IZ (Note) **(No longer available, recommended replacement: X5043M8IZ)**	X5043V Z I	X5045V14IZ (Note) **(No longer available or supported)**	X5045V Z I			-40 to 85	14 Ld TSSOP (Pb-free)

Ordering Information (Continued)

PART NUMBER $\overline{\text{RESET}}$ (ACTIVE LOW)	PART MARKING	PART NUMBER RESET (ACTIVE HIGH)	PART MARKING	V_{CC} RANGE	V_{TRIP} RANGE	TEMP RANGE (°C)	PACKAGE
X5043PZ-2.7A (Note)	X5043P Z AN	X5045PZ-2.7A (Note)	X5045P Z AN	2.7-5.5V	2.85-3.0	0 to 70	8 Ld PDIP (Pb-free)
X5043PIZ-2.7A (Note)	X5043P Z AP	X5045PIZ-2.7A (Note)	X5045P Z AP			-40 to 85	8 Ld PDIP (Pb-free)
X5043S8Z-2.7A* (Note)	X5043 Z AN	X5045S8Z-2.7A (Note)	X5045 Z AN			0 to 70	8 Ld SOIC (Pb-free)
X5043S8IZ-2.7A* (Note)	X5043 Z AP	X5045S8IZ-2.7A (Note)	X5045 Z AP			-40 to 85	8 Ld SOIC (Pb-free)
X5043M8Z-2.7A (Note)	DBR	X5045M8Z-2.7A (Note) **(No longer available, recommended replacement: X5045S8Z-2.7A)**	DCA			0 to 70	8 Ld MSOP (Pb-free)
X5043M8IZ-2.7A* (Note)	DBL	X5045M8IZ-2.7A (Note) **(No longer available, recommended replacement: X5045S8IZ-2.7A)**	DBW			-40 to 85	8 Ld MSOP (Pb-free)
X5043PZ-2.7 (Note)	X5043P Z F	X5045PZ-2.7 (Note)	X5045P Z F		2.55-2.7	0 to 70	8 Ld PDIP (Pb-free)
X5043PIZ-2.7 (Note)	X5043P Z G	X5045PIZ-2.7 (Note)	X5045P Z G			-40 to 85	8 Ld PDIP (Pb-free)
X5043S8Z-2.7* (Note)	X5043 Z F	X5045S8Z-2.7* (Note)	X5045 Z F			0 to 70	8 Ld SOIC (Pb-free)
X5043S8IZ-2.7* (Note)	X5043 Z G	X5045S8IZ-2.7* (Note)	X5045 Z G			-40 to 85	8 Ld SOIC (Pb-free)
X5043M8Z-2.7 (Note)	DBP	X5045M8Z-2.7 (Note) **(No longer available, recommended replacement: X5045S8Z-2.7)**	DBZ			0 to 70	8 Ld MSOP (Pb-free)
X5043M8IZ-2.7* (Note)	DBK	X5045M8IZ-2.7 (Note) **(No longer available, recommended replacement: X5045S8IZ-2.7)**	DBU			-40 to 85	8 Ld MSOP (Pb-free)

*Add "-T1" suffix for tape and reel.

NOTE: Intersil Pb-free plus anneal products employ special Pb-free material sets; molding compounds/die attach materials and 100% matte tin plate termination finish, which are RoHS compliant and compatible with both SnPb and Pb-free soldering operations. Intersil Pb-free products are MSL classified at Pb-free peak reflow temperatures that meet or exceed the Pb-free requirements of IPC/JEDEC J STD-020.

Pin Configuration

8 Ld SOIC/PDIP/MSOP

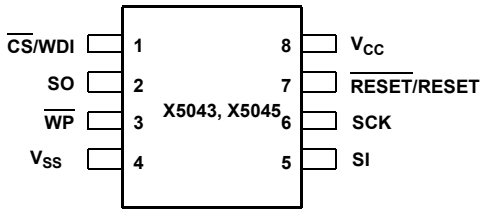

14 Ld TSSOP

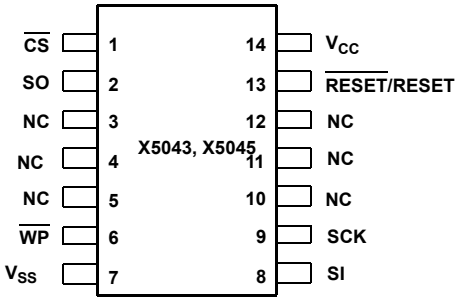

Pin Descriptions

Serial Output (SO)

SO is a push/pull serial data output pin. During a read cycle, data is shifted out on this pin. Data is clocked out by the falling edge of the serial clock.

Serial Input (SI)

SI is the serial data input pin. All opcodes, byte addresses, and data to be written to the memory are input on this pin. Data is latched by the rising edge of the serial clock.

Serial Clock (SCK)

The Serial Clock controls the serial bus timing for data input and output. Opcodes, addresses, or data present on the SI pin is latched on the rising edge of the clock input, while data on the SO pin changes after the falling edge of the clock input.

Chip Select ($\overline{CS}$/WDI)

When $\overline{CS}$ is high, the X5043, X5045 are deselected and the SO output pin is at high impedance and, unless an internal write operation is underway, the X5043, X5045 will be in the standby power mode. $\overline{CS}$ low enables the X5043, X5045, placing it in the active power mode. It should be noted that after power-up, a high to low transition on $\overline{CS}$ is required prior to the start of any operation.

Write Protect ($\overline{WP}$)

When $\overline{WP}$ is low, nonvolatile writes to the X5043, X5045 are disabled, but the part otherwise functions normally. When $\overline{WP}$ is held high, all functions, including non volatile writes operate normally. $\overline{WP}$ going low while $\overline{CS}$ is still low will interrupt a write to the X5043, X5045. If the internal write cycle has already been initiated, $\overline{WP}$ going low will have no affect on a write.

Reset ($\overline{RESET}$, RESET)

X5043, X5045, $\overline{RESET}$/RESET is an active low/HIGH, open drain output which goes active whenever V_{CC} falls below the minimum V_{CC} sense level. It will remain active until V_{CC} rises above the minimum V_{CC} sense level for 200ms. $\overline{RESET}$/RESET also goes active if the Watchdog timer is enabled and $\overline{CS}$ remains either high or low longer than the Watchdog time out period. A falling edge of $\overline{CS}$ will reset the watchdog timer.

Pin Names

SYMBOL	DESCRIPTION
$\overline{CS}$/WDI	Chip Select Input
SO	Serial Output
SI	Serial Input
SCK	Serial Clock Input
WP	Write Protect Input
V_{SS}	Ground
V_{CC}	Supply Voltage
$\overline{RESET}$/RESET	Reset Output

Principles of Operation

Power-on Reset

Application of power to the X5043, X5045 activate a Power-on Reset Circuit. This circuit pulls the $\overline{RESET}$/RESET pin active. $\overline{RESET}$/RESET prevents the system microprocessor from starting to operate with insufficient voltage or prior to stabilization of the oscillator. When V_{CC} exceeds the device V_{TRIP} value for 200ms (nominal) the circuit releases $\overline{RESET}$/RESET, allowing the processor to begin executing code.

Low Voltage Monitoring

During operation, the X5043, X5045 monitor the V_{CC} level and asserts $\overline{RESET}$/RESET if supply voltage falls below a preset minimum V_{TRIP}. The $\overline{RESET}$/RESET signal prevents the microprocessor from operating in a power fail or brownout condition. The $\overline{RESET}$/RESET signal remains active until the voltage drops below 1V. It also remains active until V_{CC} returns and exceeds V_{TRIP} for 200ms.

Watchdog Timer

The Watchdog Timer circuit monitors the microprocessor activity by monitoring the WDI input. The microprocessor must toggle the $\overline{CS}$/WDI pin periodically to prevent an active $\overline{RESET}$/RESET signal. The $\overline{CS}$/WDI pin must be toggled from HIGH to LOW prior to the expiration of the watchdog time out period. The state of two nonvolatile control bits in the Status Register determines the watchdog timer period. The microprocessor can change these watchdog bits. With no microprocessor action, the watchdog timer control bits remain unchanged, even during total power failure.

V_{CC} Threshold Reset Procedure

The X5043, X5045 are shipped with a standard V_{CC} threshold (V_{TRIP}) voltage. This value will not change over normal operating and storage conditions. However, in applications where the standard V_{TRIP} is not exactly right, or if higher precision is needed in the V_{TRIP} value, the X5043, X5045 threshold may be adjusted. The procedure is described below, and uses the application of a high voltage control signal.

Setting the V_{TRIP} Voltage

This procedure is used to set the V_{TRIP} to a higher voltage value. For example, if the current V_{TRIP} is 4.4V and the new V_{TRIP} is 4.6V, this procedure will directly make the change. If the new setting is to be lower than the current setting, then it is necessary to reset the trip point before setting the new value.

To set the new V_{TRIP} voltage, apply the desired V_{TRIP} threshold voltage to the V_{CC} pin and tie the $\overline{WP}$ pin to the programming voltage V_P. Then send a WREN command, followed by a write of Data 00h to address 01h. $\overline{CS}$ going HIGH on the write operation initiates the V_{TRIP} programming sequence. Bring $\overline{WP}$ LOW to complete the operation.

Note: This operation also writes 00h to array address 01h.

Resetting the V_{TRIP} Voltage

This procedure is used to set the V_{TRIP} to a “native” voltage level. For example, if the current V_{TRIP} is 4.4V and the new V_{TRIP} must be 4.0V, then the V_{TRIP} must be reset. When V_{TRIP} is reset, the new V_{TRIP} is something less than 1.7V. This procedure must be used to set the voltage to a lower value.

To reset the V_{TRIP} voltage, apply at least 3V to the V_{CC} pin and tie the $\overline{WP}$ pin to the programming voltage V_P. Then send a WREN command, followed by a write of Data 00h to address 03h. $\overline{CS}$ going HIGH on the write operation initiates the V_{TRIP} programming sequence. Bring $\overline{WP}$ LOW to complete the operation.

Note: This operation also writes 00h to array address 03h.

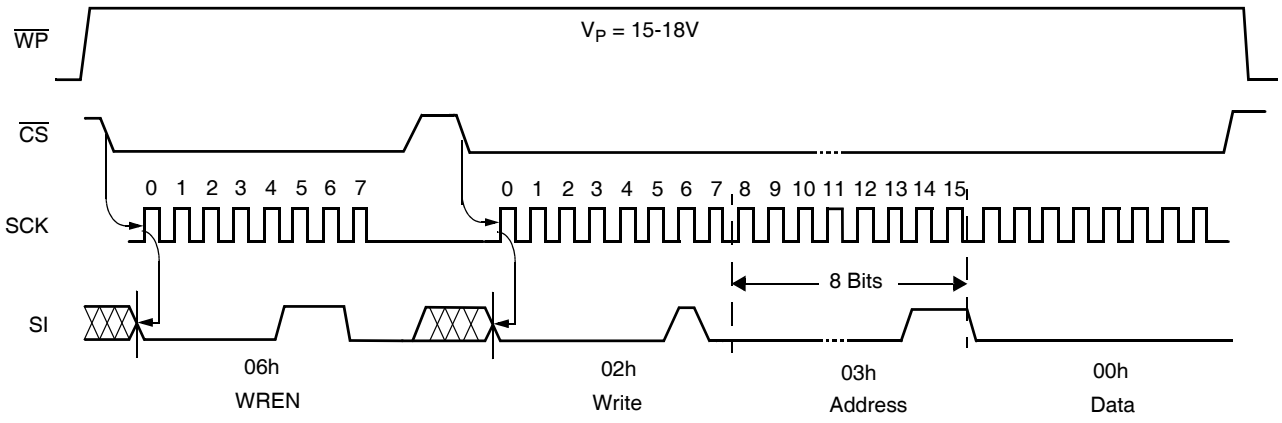

FIGURE 2. RESET V_{TRIP} LEVEL SEQUENCE (V_{CC} > 3V. $\overline{WP}$ = 15–18V)

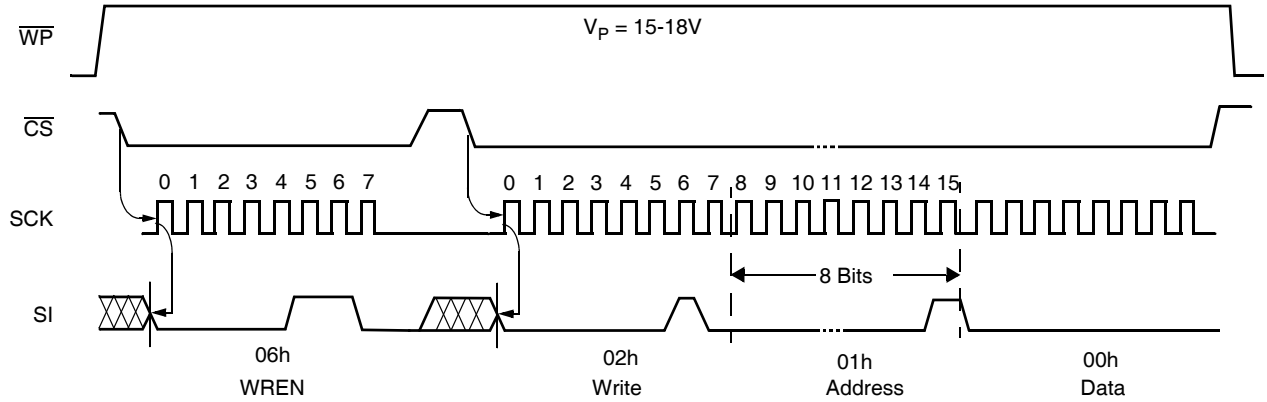

FIGURE 1. SET V_{TRIP} LEVEL SEQUENCE (V_{CC} = DESIRED V_{TRIP} VALUE.)

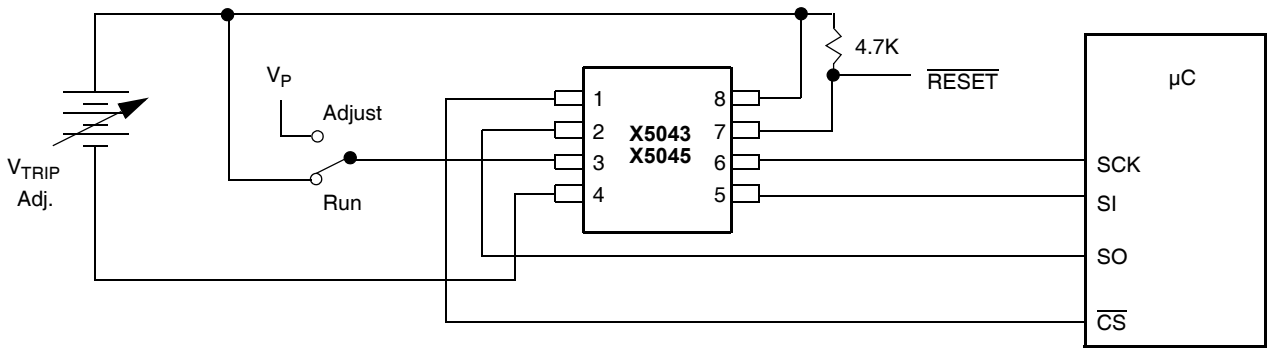

FIGURE 3. SAMPLE V_{TRIP} RESET CIRCUIT

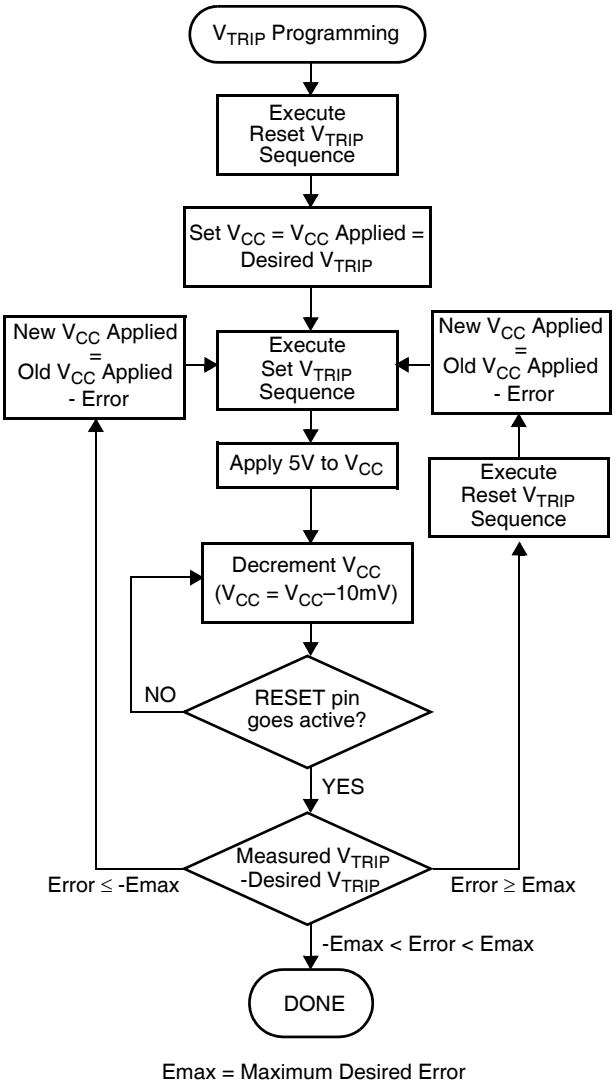

FIGURE 4. V_{TRIP} PROGRAMMING SEQUENCE

SPI Serial Memory

The memory portion of the device is a CMOS Serial EEPROM array with Intersil's block lock protection. The array is internally organized as 512 x 8 bits. The device features a Serial Peripheral Interface (SPI) and software protocol allowing operation on a simple four-wire bus.

The device utilizes Intersil's proprietary Direct Write™ cell, providing a minimum endurance of 1,000,000 cycles and a minimum data retention of 100 years.

The device is designed to interface directly with the synchronous Serial Peripheral Interface (SPI) of many popular microcontroller families.

The device contains an 8-bit instruction register that controls the operation of the device. The instruction code is written to the device via the SI input. There are two write operations that requires only the instruction byte. There are two read operations that use the instruction byte to initiate the output of data. The remainder of the operations require an instruction byte, an 8-bit address, then data bytes. All instruction, address and data bits are clocked by the SCK input. All instructions (Table 1), addresses and data are transferred MSB first.

Clock and Data Timing

Data input on the SI line is latched on the first rising edge of SCK after $\overline{CS}$ goes LOW. Data is output on the SO line by the falling edge of SCK. SCK is static, allowing the user to stop the clock and then start it again to resume operations where left off. $\overline{CS}$ must be LOW during the entire operation.

TABLE 1. INSTRUCTION SET

INSTRUCTION NAME	INSTRUCTION FORMAT*	OPERATION
WREN	0000 0110	Set the Write Enable Latch (Enable Write Operations)
WRDI	0000 0100	Reset the Write Enable Latch (Disable Write Operations)
RSDR	0000 0101	Read Status Register
WRSR	0000 0001	Write Status Register (Watchdog and Block Lock)
READ	0000 $A_8$011	Read Data from Memory Array Beginning at Selected Address
WRITE	0000 $A_8$010	Write Data to Memory Array Beginning at Selected Address (1 to 16 bytes)

Note: *Instructions are shown MSB in leftmost position. Instructions are transferred MSB first.

Write Enable Latch

The device contains a Write Enable Latch. This latch must be SET before a Write Operation is initiated. The WREN instruction will set the latch and the WRDI instruction will reset the latch (Figure 5). This latch is automatically reset upon a power-up condition and after the completion of a valid byte, page, or status register write cycle. The latch is also reset if $\overline{WP}$ is brought LOW.

When issuing a WREN, WRDI or RDSR commands, it is not necessary to send a byte address or data.

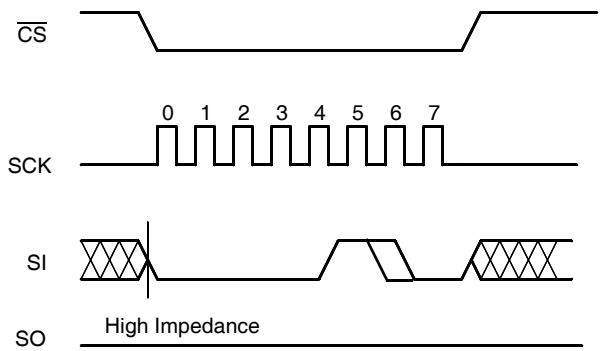

FIGURE 5. WRITE ENABLE/DISABLE LATCH SEQUENCE (WREN/WRDI INSTRUCTION)

Status Register

The Status Register contains four nonvolatile control bits and two volatile status bits. The control bits set the operation of the watchdog timer and the memory block lock protection. The Status Register is formatted as shown in “Status Register”.

Status Register: (Default = 30H)

7	6	5	4	3	2	1	0
0	0	WD1	WD0	BL1	BL0	WEL	WIP

The Write-In-Progress (WIP) bit is a volatile, read only bit and indicates whether the device is busy with an internal nonvolatile write operation. The WIP bit is read using the RDSR instruction. When set to a “1”, a nonvolatile write operation is in progress. When set to a “0”, no write is in progress.

The Write Enable Latch (WEL) bit indicates the status of the “write enable” latch. When WEL = 1, the latch is set and when WEL = 0 the latch is reset. The WEL bit is a volatile, read only bit. The WREN instruction sets the WEL bit and the WRDS instruction resets the WEL bit.

The block lock bits, BL0 and BL1, set the level of block lock protection. These nonvolatile bits are programmed using the WRSR instruction and allow the user to protect one quarter, one half, all or none of the EEPROM array. Any portion of the array that is block lock protected can be read but not written. It will remain protected until the BL bits are altered to disable block lock protection of that portion of memory.

STATUS REG BITS		ARRAY ADDRESSES PROTECTED
BL1	BL0	X5043, X5045
0	0	None
0	1	$180–$1FF
1	0	$100–$1FF
1	1	$000–$1FF

The Watchdog Timer bits, WD0 and WD1, select the Watchdog Time-out Period. These nonvolatile bits are programmed with the WRSR instruction.

STATUS REGISTER BITS		WATCHDOG TIME OUT (TYPICAL)
WD1	WD0	
0	0	1.4 seconds
0	1	600 milliseconds
1	0	200 milliseconds
1	1	disabled (factory default)

Read Status Register

To read the Status Register, pull $\overline{CS}$ low to select the device, then send the 8-bit RDSR instruction. Then the contents of the Status Register are shifted out on the SO line, clocked by CLK. Refer to the Read Status Register Sequence (Figure 6). The Status Register may be read at any time, even during a Write Cycle.

Write Status Register

Prior to any attempt to write data into the status register, the “Write Enable” Latch (WEL) must be set by issuing the WREN instruction (Figure 5). First pull $\overline{CS}$ LOW, then clock the WREN instruction into the device and pull $\overline{CS}$ HIGH. Then bring $\overline{CS}$ LOW again and enter the WRSR instruction followed by 8 bits of data. These 8 bits of data correspond to the contents of the status register. The operation ends with $\overline{CS}$ going HIGH. If $\overline{CS}$ does not go HIGH between WREN and WRSR, the WRSR instruction is ignored.

TABLE 2. DEVICE PROTECT MATRIX

WREN CMD (WEL)	DEVICE PIN (WP)	MEMORY BLOCK		STATUS REGISTER (BL0, BL1, WD0, WD1)
		PROTECTED AREA	UNPROTECTED AREA	
0	x	Protected	Protected	Protected
x	0	Protected	Protected	Protected

TABLE 2. DEVICE PROTECT MATRIX

WREN CMD (WEL)	DEVICE PIN (WP)	MEMORY BLOCK		STATUS REGISTER (BL0, BL1, WD0, WD1)
		PROTECTED AREA	UNPROTECTED AREA	
1	1	Protected	Writable	Writable

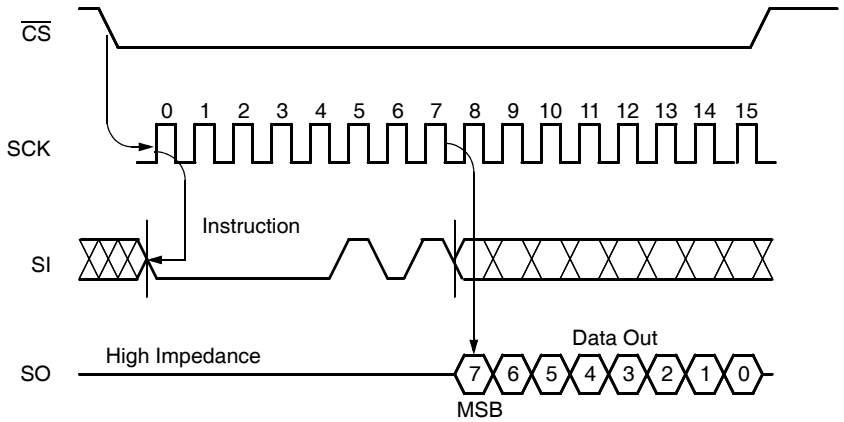

FIGURE 6. READ STATUS REGISTER SEQUENCE

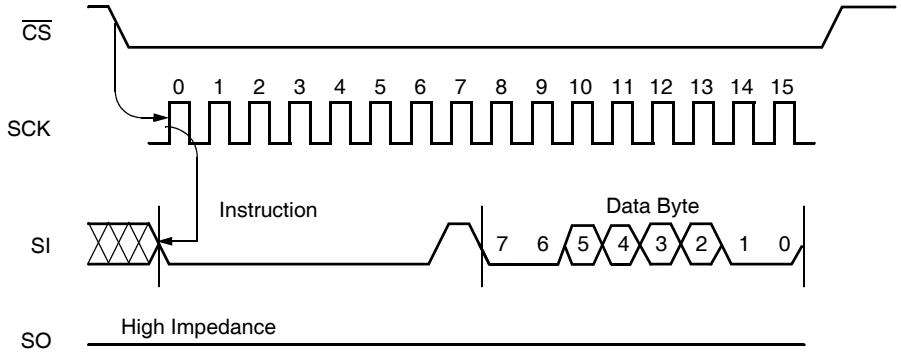

FIGURE 7. WRITE STATUS REGISTER SEQUENCE

Read Memory Array

When reading from the EEPROM memory array, $\overline{CS}$ is first pulled low to select the device. The 8-bit READ instruction is transmitted to the device, followed by the 8-bit address. Bit 3 of the READ instruction selects the upper or lower half of the device. After the READ opcode and address are sent, the data stored in the memory at the selected address is shifted out on the SO line. The data stored in memory at the next address can be read sequentially by continuing to provide clock pulses. The address is automatically incremented to the next higher address after each byte of data is shifted out. When the highest address is reached, the address counter rolls over to address 000h allowing the read cycle to be continued indefinitely. The read operation is terminated by taking $\overline{CS}$ high. Refer to the Read EEPROM Array Sequence (Figure 8).

Write Memory Array

Prior to any attempt to write data into the memory array, the "Write Enable" Latch (WEL) must be set by issuing the WREN instruction (Figure 5). First pull $\overline{CS}$ LOW, then clock the WREN instruction into the device and pull $\overline{CS}$ HIGH. Then bring $\overline{CS}$ LOW again and enter the WRITE instruction followed by the 8-bit address and then the data to be written. Bit 3 of the WRITE instruction contains address bit A_8, which selects the upper or lower half of the array. If $\overline{CS}$ does not go HIGH between WREN and WRITE, the WRITE instruction is ignored.

The WRITE operation requires at least 16 clocks. $\overline{CS}$ must go low and remain low for the duration of the operation. The host may continue to write up to 16 bytes of data. The only restriction is that the 16 bytes must reside within the same page. A page address begins with address [x xxxx 0000] and ends with [x xxxx 1111]. If the byte address reaches the last byte on the page and the clock continues, the counter will roll back to the first address of the page and overwrite any data that has been previously written.

For the write operation (byte or page write) to be completed, $\overline{CS}$ must be brought HIGH after bit 0 of the last complete data byte to be written is clocked in. If it is brought HIGH at any other time, the write operation will not be completed (Figure 9).

While the write is in progress following a status register or memory array write sequence, the Status Register may be read to check the WIP bit. WIP is HIGH while the nonvolatile write is in progress.

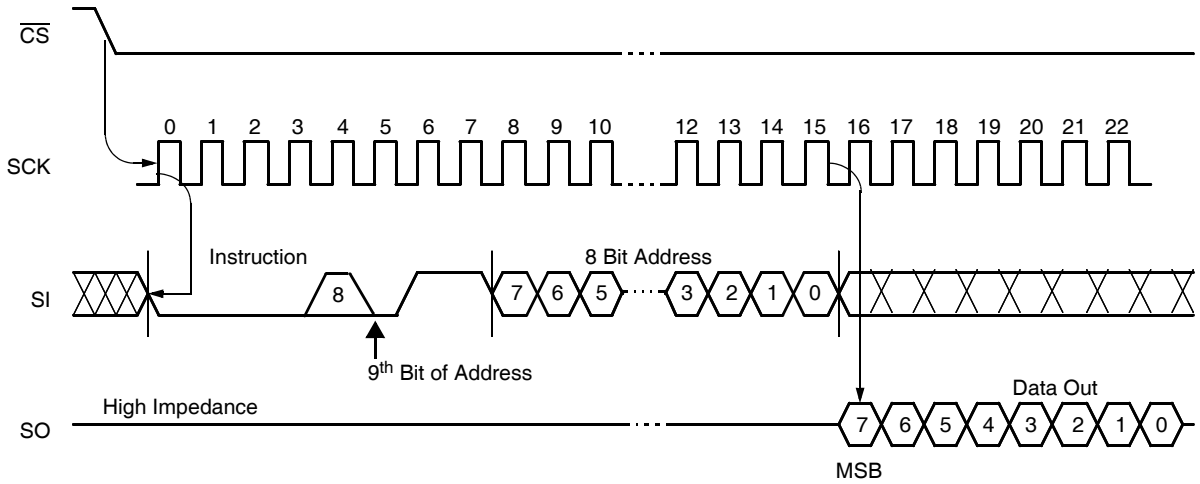

FIGURE 8. READ EEPROM ARRAY SEQUENCE

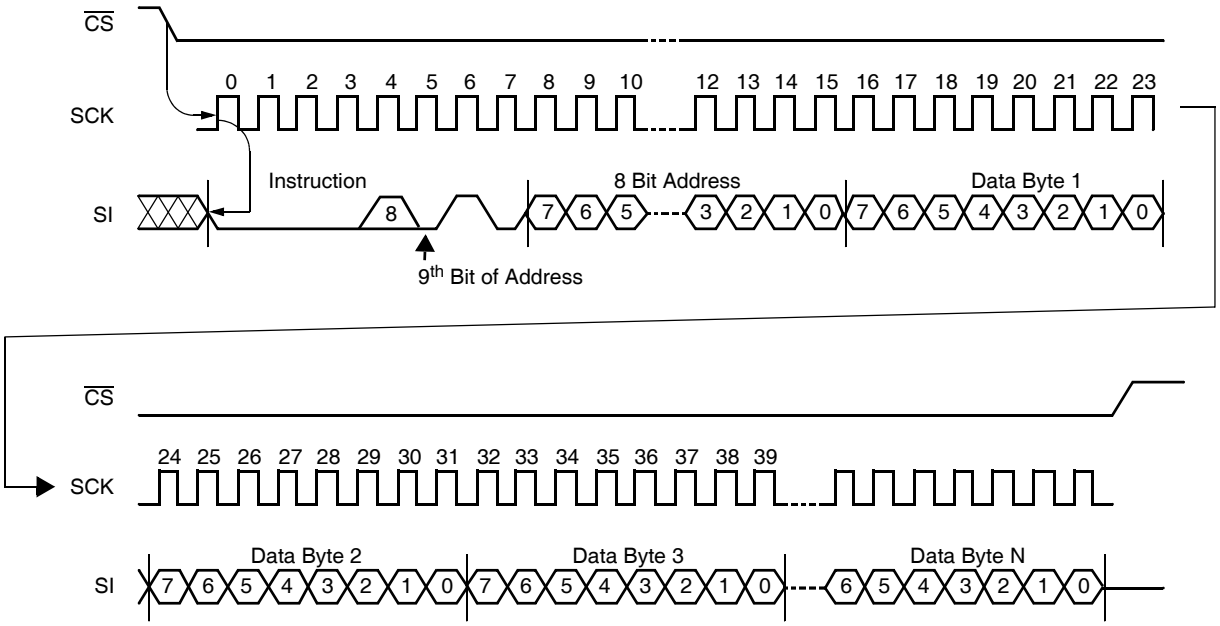

FIGURE 9. WRITE MEMORY SEQUENCE

Operational Notes

The device powers-up in the following state:

1. The device is in the low power standby state.
2. A HIGH to LOW transition on $\overline{CS}$ is required to enter an active state and receive an instruction.
3. SO pin is high impedance.
4. The Write Enable Latch is reset.
5. The Flag Bit is reset.
6. Reset Signal is active for t_{PURST}.

Data Protection

The following circuitry has been included to prevent inadvertent writes:

- A WREN instruction must be issued to set the Write Enable Latch.
- $\overline{CS}$ must come HIGH at the proper clock count in order to start a nonvolatile write cycle.
- Block Protect bits provide additional level of write protection for the memory array.
- The $\overline{WP}$ pin LOW blocks nonvolatile write operations.

Absolute Maximum Ratings

Temperature under bias . . . . . -65°C to +135°C
Storage temperature . . . . . -65°C to +150°C
Voltage on any pin with
respect to V_{SS} . . . . . -1.0V to +7V
D.C. output current. 5mA
Lead temperature (soldering, 10 seconds) . . . . . 300°C

Recommended Operating Conditions

Temperature:
Commercial. . . . . 0°C to +70°C
Industrial . . . . . -40°C to +85°C
Supply Voltage:
-2.7, -2.7A . . . . . 2.7V to 5.5V
Blank, -4.5A . . . . . 4.5V to 5.5V

CAUTION: Stresses above those listed under "Absolute Maximum Ratings" may cause permanent damage to the device. This is a stress rating only; functional operation of the device (at these or any other conditions above those listed in the operational sections of this specification) is not implied. Exposure to absolute maximum rating conditions for extended periods may affect device reliability.

DC Electrical Specifications (Over the recommended operating conditions unless otherwise specified.)

SYMBOL	PARAMETER	TEST CONDITIONS/COMMENTS	LIMITS			UNIT
			MIN	TYP(2)	MAX	
I_{CC1}	V_{CC} Write Current (Active)	SCK = 3.3MHz(3); SO, $\overline{RESET}$, RESET = Open			3	mA
I_{CC2}	V_{CC} Read Current (Active)	SCK = 3.3MHz(3); SI = V_{SS}, $\overline{RESET}$, RESET = Open			2	mA
I_{SB1}	V_{CC} Standby Current WDT = OFF	$\overline{CS}$ = V_{CC}, SCK, SI = V_{SS}, V_{CC} = 5.5V			10	µA
I_{SB2}	V_{CC} Standby Current WDT = ON	$\overline{CS}$ = V_{CC}, SCK, SI = V_{SS}, V_{CC} = 5.5V			50	µA
I_{LI}	Input Leakage Current	SCK, SI, WP = V_{SS} to V_{CC}		0.1	10	µA
I_{LO}	Output Leakage Current	SO, $\overline{RESET}$, RESET = V_{SS} to V_{CC}		0.1	10	µA
V_{IL}(1)	Input LOW Voltage	SCK, SI, $\overline{WP}$, $\overline{CS}$	-0.5		V_{CC} x 0.3	V
V_{IH}(1)	Input HIGH Voltage	SCK, SI, $\overline{WP}$, $\overline{CS}$	V_{CC} x 0.7		V_{CC} + 0.5	V
V_{OL}	Output LOW Voltage (SO)	I_{OL} = 2mA @ V_{CC} = 2.7V I_{OL} = 0.5mA @ V_{CC} = 1.8V			0.4	V
V_{OH1}	Output HIGH Voltage (SO)	V_{CC} > 3.3V, I_{OH} = –1.0mA	V_{CC} - 0.8			V
V_{OH2}	Output HIGH Voltage (SO)	2V < V_{CC} ≤ 3.3V, I_{OH} = –0.4mA	V_{CC} - 0.4			V
V_{OH3}	Output HIGH Voltage (SO)	V_{CC} ≤ 2V, I_{OH} = –0.25mA	V_{CC} - 0.2			V
V_{OLRS}	Output LOW Voltage ($\overline{RESET}$, RESET)	I_{OL} = 1mA			0.4	V

Capacitance T_A = +25°C, f = 1MHz, V_{CC} = 5V

SYMBOL	TEST	CONDITIONS	MAX	UNIT
C_{OUT}(2)	Output Capacitance (SO, $\overline{RESET}$, RESET)	V_{OUT} = 0V	8	pF
C_{IN}(2)	Input Capacitance (SCK, SI, $\overline{CS}$, $\overline{WP}$)	V_{IN} = 0V	6	pF

NOTES:

1. V_{IL} min. and V_{IH} max. are for reference only and are not tested.
2. This parameter is periodically sampled and not 100% tested.
3. SCK frequency measured from V_{CC} x 0.1/V_{CC} x 0.9

Equivalent A.C. Load Circuit at 5V V_{CC}

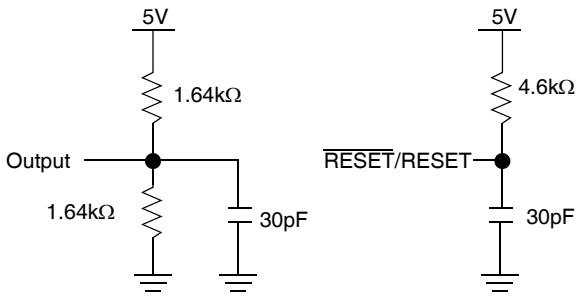

A.C. Test Conditions

Input pulse levels	V_{CC} x 0.1 to V_{CC} x 0.9
Input rise and fall times	10ns
Input and output timing level	V_{CC} x 0.5

AC Electrical Specifications (Over recommended operating conditions, unless otherwise specified)

SYMBOL	PARAMETER	2.7V–5.5V		UNIT
		MIN	MAX	
DATA INPUT TIMING				
f_{SCK}	Clock Frequency	0	3.3	MHz
t_{CYC}	Cycle Time	300		ns
t_{LEAD}	$\overline{CS}$ Lead Time	150		ns
t_{LAG}	$\overline{CS}$ Lag Time	150		ns
t_{WH}	Clock HIGH Time	130		ns
t_{WL}	Clock LOW Time	130		ns
t_{SU}	Data Setup Time	30		ns
t_H	Data Hold Time	30		ns
t_{RI}(4)	Input Rise Time		2	µs
t_{FI}(4)	Input Fall Time		2	µs
t_{CS}	$\overline{CS}$ Deselect Time	100		ns
t_{WC}(5)	Write Cycle Time		10	ms

Data Output Timing

SYMBOL	PARAMETER	2.7–5.5V		UNIT
		MIN	MAX	
f_{SCK}	Clock Frequency	0	3.3	MHz
t_{DIS}	Output Disable Time		150	ns
t_V	Output Valid from Clock Low		120	ns
t_{HO}	Output Hold Time	0		ns
t_{RO}(4)	Output Rise Time		50	ns
t_{FO}(4)	Output Fall Time		50	ns

NOTES:

4. This parameter is periodically sampled and not 100% tested.
5. t_{WC} is the time from the rising edge of $\overline{CS}$ after a valid write sequence has been sent to the end of the self-timed internal nonvolatile write cycle.

Serial Output Timing

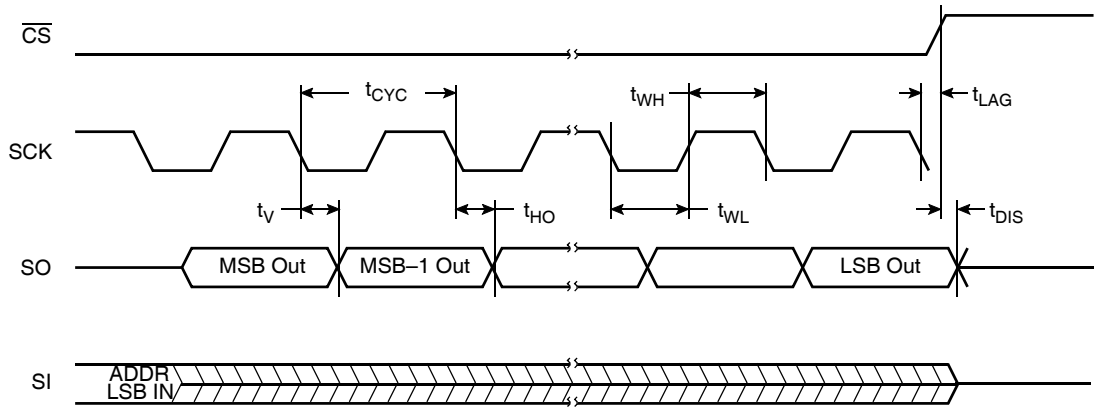

Serial Input Timing

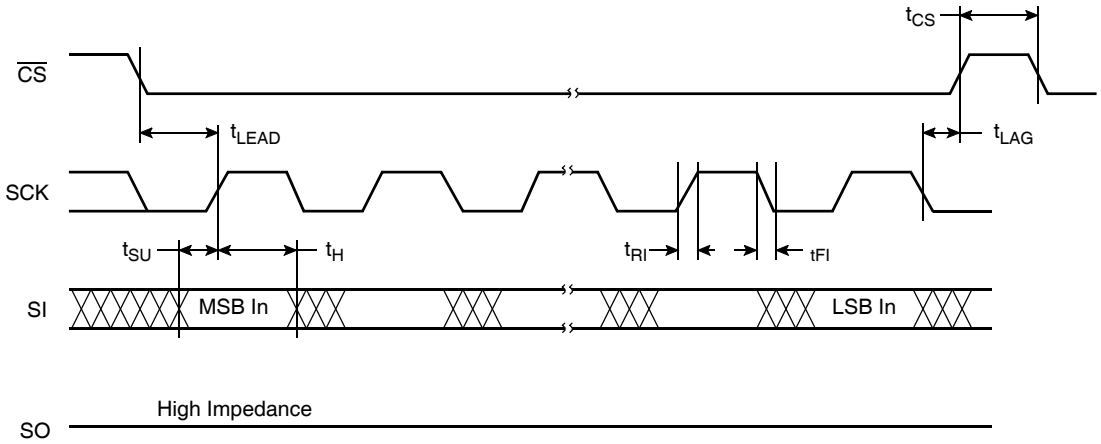

Symbol Table

WAVEFORM	INPUTS	OUTPUTS
	Must be steady	Will be steady
	May change from LOW to HIGH	Will change from LOW to HIGH
	May change from HIGH to LOW	Will change from HIGH to LOW
	Don't Care: Changes Allowed	Changing: State Not Known
	N/A	Center Line is High Impedance

Power-Up and Power-Down Timing

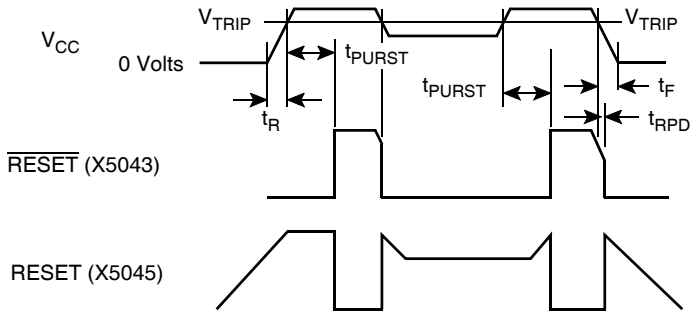

$\overline{\text{RESET}}$ Output Timing

SYMBOL	PARAMETER	MIN	TYP	MAX	UNIT
V_{TRIP}	Reset Trip Point Voltage, (-4.5A) Reset Trip Point Voltage, (Blank) Reset Trip Point Voltage, (-2.7A) Reset Trip Point Voltage, (-2.7)	4.5 4.25 2.85 2.55	4.62 4.38 2.92 2.62	4.75 4.5 3.0 2.7	V
t_{PURST}	Power-up Reset Time Out	100	200	400	ms
t_{RPD}(6)	V_{CC} Detect to Reset/Output			500	ns
t_F(6)	V_{CC} Fall Time	10			µs
t_R(6)	V_{CC} Rise Time	0.1			ns
V_{RVALID}	Reset Valid V_{CC}	1			V

NOTE:

6. This parameter is periodically sampled and not 100% tested.

$\overline{\text{CS}}$/WDI vs. RESET/RESET Timing

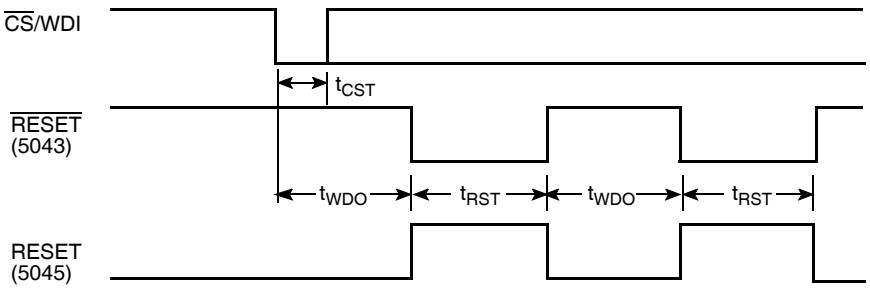

$\overline{\text{RESET}}$/RESET Output Timing

SYMBOL	PARAMETER	MIN	TYP	MAX	UNIT
t_{WDO}	Watchdog Time Out Period, WD1 = 1, WD0 = 1 (default) WD1 = 1, WD0 = 0 WD1 = 0, WD0 = 1 WD1 = 0, WD0 = 0	 100 450 1	 OFF 200 600 1.4	 300 800 2	 ms ms sec
t_{CST}	$\overline{\text{CS}}$ Pulse Width to Reset the Watchdog	400			ns
t_{RST}	Reset Time Out	100	200	400	ms

V_{TRIP} Programming Timing Diagram

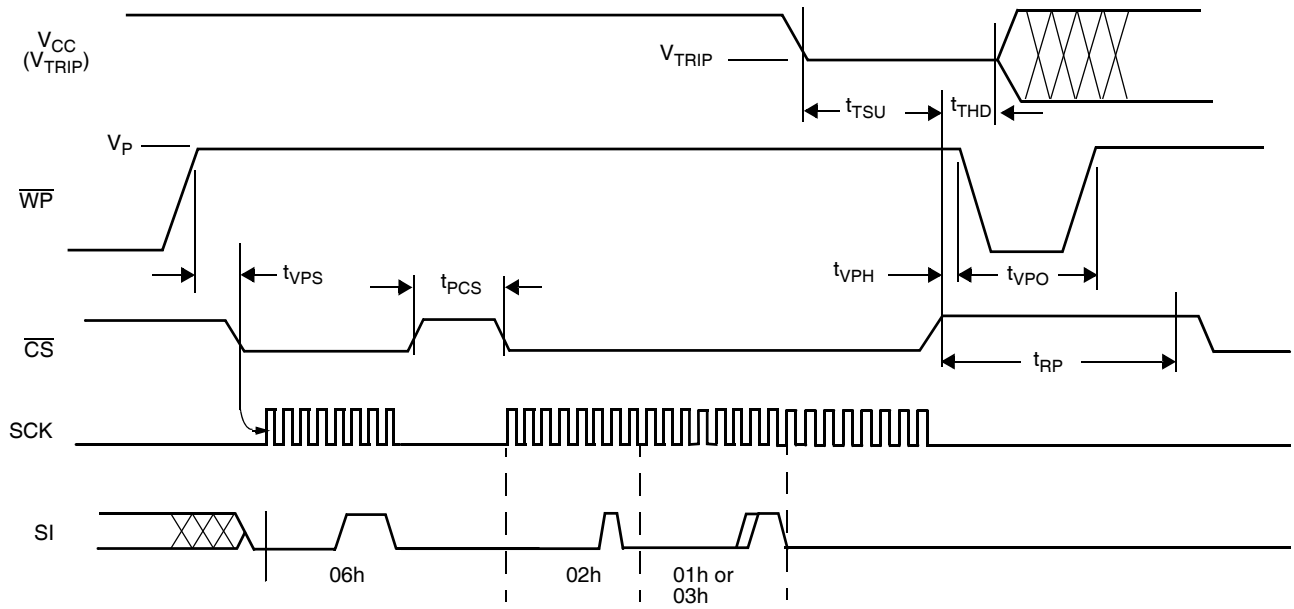

V_{TRIP} Programming Parameters

PARAMETER	DESCRIPTION	MIN	MAX	UNIT
t_{VPS}	V_{TRIP} Program Enable Voltage Setup time	1		µs
t_{VPH}	V_{TRIP} Program Enable Voltage Hold time	1		µs
t_{PCS}	V_{TRIP} Programming $\overline{CS}$ inactive time	1		µs
t_{TSU}	V_{TRIP} Setup time	1		µs
t_{THD}	V_{TRIP} Hold (stable) time	10		ms
t_{WC}	V_{TRIP} Write Cycle Time		10	ms
t_{VPO}	V_{TRIP} Program Enable Voltage Off time (Between successive adjustments)	0		µs
t_{RP}	V_{TRIP} Program Recovery Period (Between successive adjustments)	10		ms
V_P	Programming Voltage	15	18	V
V_{TRAN}	V_{TRIP} Programmed Voltage Range	1.7	4.75	V
V_{tv}	V_{TRIP} Program variation after programming (0-75°C). (Programmed at 25°C.)	-25	+25	mV

V_{TRIP} programming parameters are periodically sampled and are not 100% tested.

Revision History

The revision history provided is for informational purposes only and is believed to be accurate, but not warranted. Please go to the web to make sure that you have the latest revision.

DATE	REVISION	CHANGE
September 23, 2015	FN8126.3	- Updated Ordering Information Table on page 3. - Added Revision History. - Added About Intersil Verbiage. - Attached current POD.

About Intersil

Intersil Corporation is a leading provider of innovative power management and precision analog solutions. The company's products address some of the largest markets within the industrial and infrastructure, mobile computing and high-end consumer markets.

For the most updated datasheet, application notes, related documentation and related parts, please see the respective product information page found at www.intersil.com.

You may report errors or suggestions for improving this datasheet by visiting www.intersil.com/ask.

Reliability reports are also available from our website at www.intersil.com/support.

© Copyright Intersil Americas LLC 2005-2015 All Rights Reserved.
All trademarks and registered trademarks are the property of their respective owners.

For additional products, see www.intersil.com/en/products.html

Intersil products are manufactured, assembled and tested utilizing ISO9001 quality systems as noted in the quality certifications found at www.intersil.com/en/support/qualandreliability.html

Intersil products are sold by description only. Intersil may modify the circuit design and/or specifications of products at any time without notice, provided that such modification does not, in Intersil's sole judgment, affect the form, fit or function of the product. Accordingly, the reader is cautioned to verify that datasheets are current before placing orders. Information furnished by Intersil is believed to be accurate and reliable. However, no responsibility is assumed by Intersil or its subsidiaries for its use; nor for any infringements of patents or other rights of third parties which may result from its use. No license is granted by implication or otherwise under any patent or patent rights of Intersil or its subsidiaries.

For information regarding Intersil Corporation and its products, see www.intersil.com

Plastic Dual-In-Line Packages (PDIP)

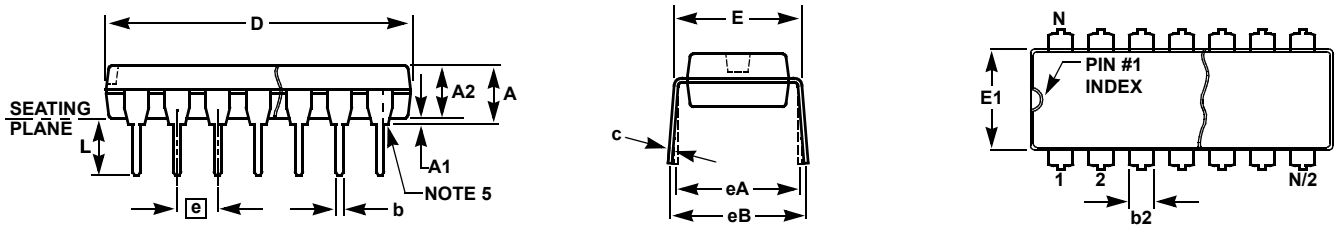

MDP0031

PLASTIC DUAL-IN-LINE PACKAGE

SYMBOL	INCHES					TOLERANCE	NOTES
	PDIP8	PDIP14	PDIP16	PDIP18	PDIP20		
A	0.210	0.210	0.210	0.210	0.210	MAX	
A1	0.015	0.015	0.015	0.015	0.015	MIN	
A2	0.130	0.130	0.130	0.130	0.130	±0.005	
b	0.018	0.018	0.018	0.018	0.018	±0.002	
b2	0.060	0.060	0.060	0.060	0.060	+0.010/-0.015	
c	0.010	0.010	0.010	0.010	0.010	+0.004/-0.002	
D	0.375	0.750	0.750	0.890	1.020	±0.010	1
E	0.310	0.310	0.310	0.310	0.310	+0.015/-0.010	
E1	0.250	0.250	0.250	0.250	0.250	±0.005	2
e	0.100	0.100	0.100	0.100	0.100	Basic	
eA	0.300	0.300	0.300	0.300	0.300	Basic	
eB	0.345	0.345	0.345	0.345	0.345	±0.025	
L	0.125	0.125	0.125	0.125	0.125	±0.010	
N	8	14	16	18	20	Reference	

Rev. C 2/07

NOTES:

1. Plastic or metal protrusions of 0.010” maximum per side are not included.
2. Plastic interlead protrusions of 0.010” maximum per side are not included.
3. Dimensions E and eA are measured with the leads constrained perpendicular to the seating plane.
4. Dimension eB is measured with the lead tips unconstrained.
5. 8 and 16 lead packages have half end-leads as shown.

Package Outline Drawing

M8.15

8 LEAD NARROW BODY SMALL OUTLINE PLASTIC PACKAGE

Rev 4, 1/12

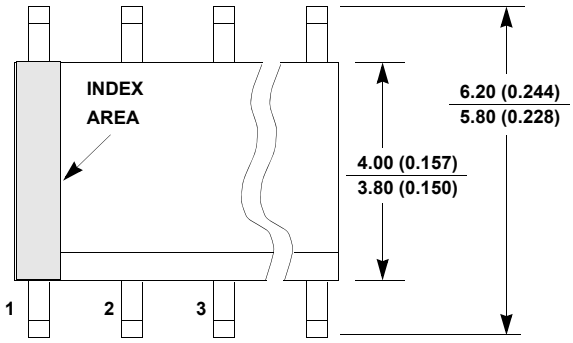

TOP VIEW

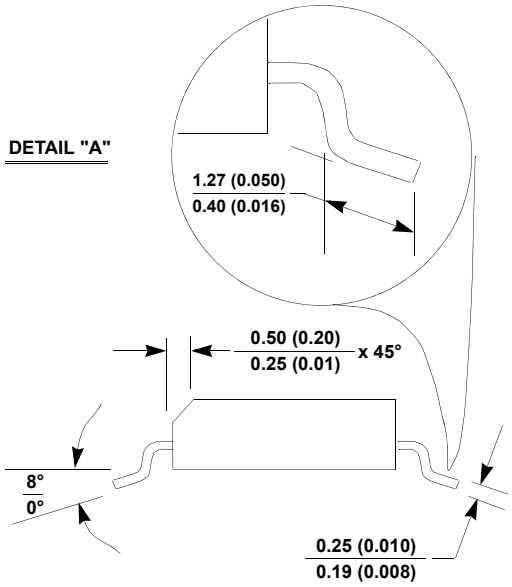

SIDE VIEW “B”

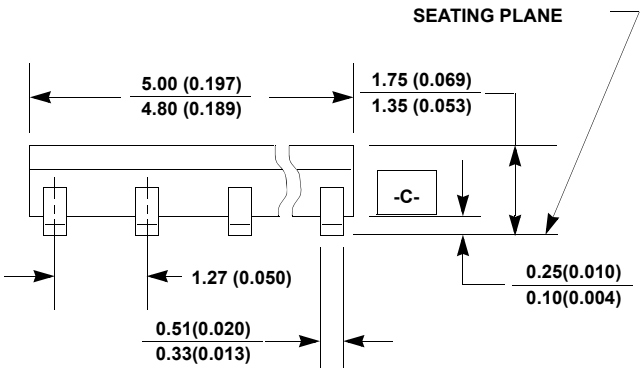

SIDE VIEW “A”

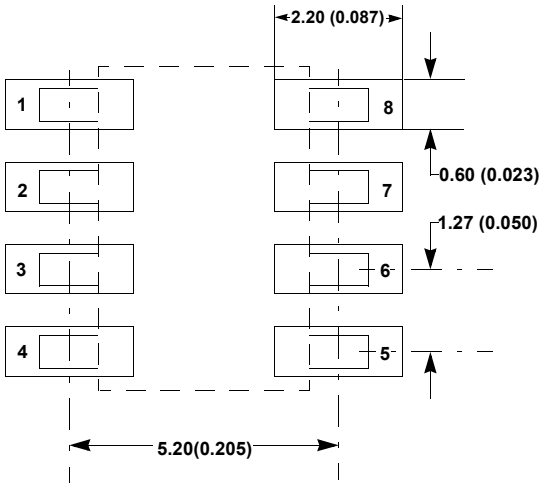

TYPICAL RECOMMENDED LAND PATTERN

NOTES:

6. Dimensioning and tolerancing per ANSI Y14.5M-1994.
7. Package length does not include mold flash, protrusions or gate burrs. Mold flash, protrusion and gate burrs shall not exceed 0.15mm (0.006 inch) per side.
8. Package width does not include interlead flash or protrusions. Interlead flash and protrusions shall not exceed 0.25mm (0.010 inch) per side.
9. The chamfer on the body is optional. If it is not present, a visual index feature must be located within the crosshatched area.
10. Terminal numbers are shown for reference only.
11. The lead width as measured 0.36mm (0.014 inch) or greater above the seating plane, shall not exceed a maximum value of 0.61mm (0.024 inch).
12. Controlling dimension: MILLIMETER. Converted inch dimensions are not necessarily exact.
13. This outline conforms to JEDEC publication MS-012-AA ISSUE C.

Package Outline Drawing

M8.118

8 LEAD MINI SMALL OUTLINE PLASTIC PACKAGE

Rev 4, 7/11

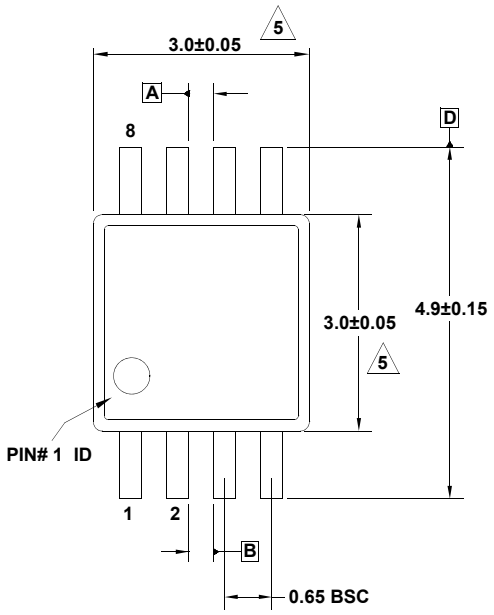

TOP VIEW

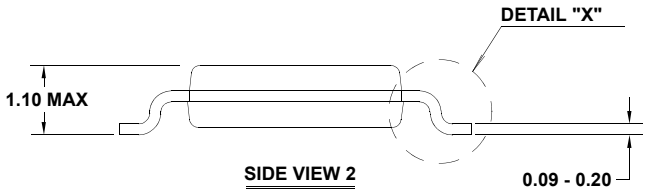

SIDE VIEW 2

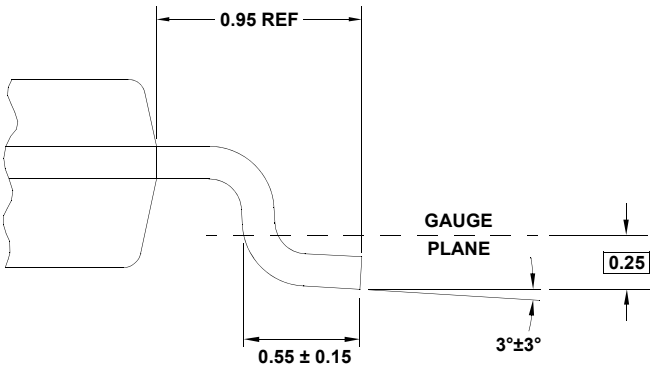

DETAIL "X"

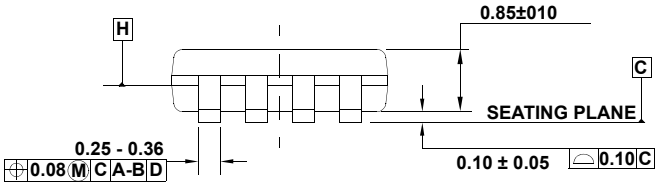

SIDE VIEW 1

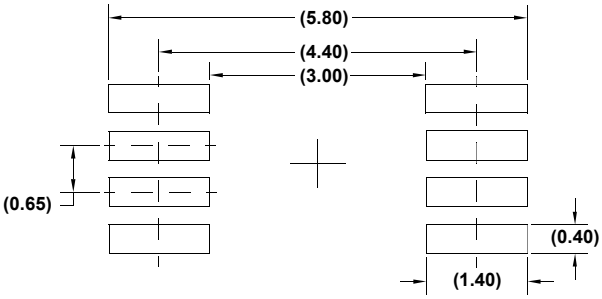

TYPICAL RECOMMENDED LAND PATTERN

NOTES:

1. Dimensions are in millimeters.
2. Dimensioning and tolerancing conform to JEDEC MO-187-AA and AMSEY14.5m-1994.
3. Plastic or metal protrusions of 0.15mm max per side are not included.
4. Plastic interlead protrusions of 0.15mm max per side are not included.
5. Dimensions are measured at Datum Plane "H".
6. Dimensions in ( ) are for reference only.