THIS DRAWING IS UNPUBLISHED. RELEASED FOR PUBLICATION ,19 .
© COPYRIGHT 19 By – ALL RIGHTS RESERVED.

REVISIONS

| P | LTR | DESCRIPTION | DATE | DWN | APVD |
|---|---|---|---|---|---|
| | F5 | REVISE PER ECR-17-006818 | 10MAY17 | HX | WH |

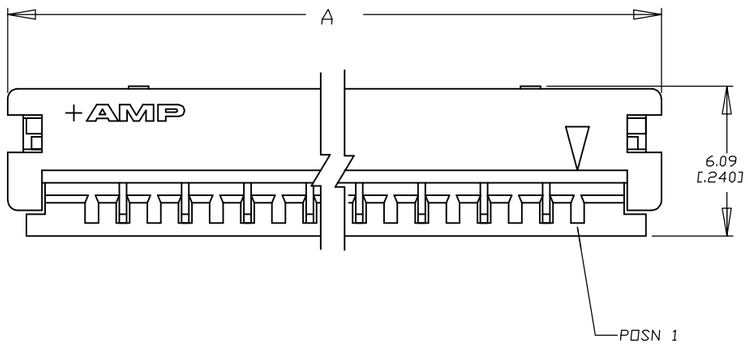


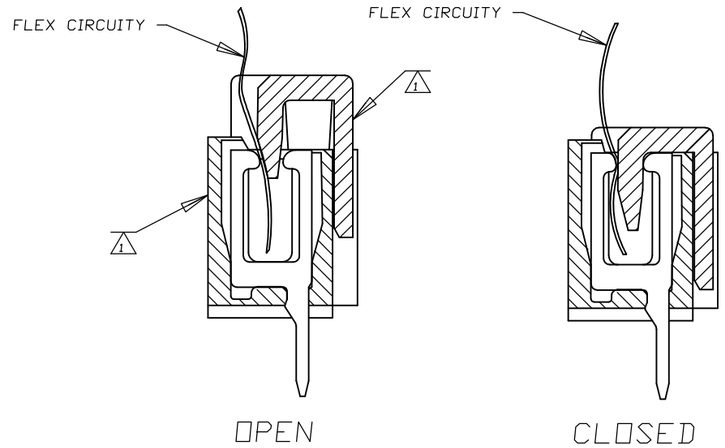


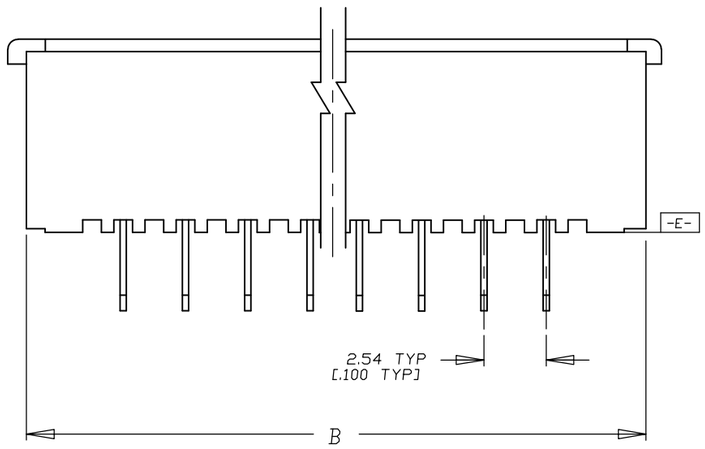


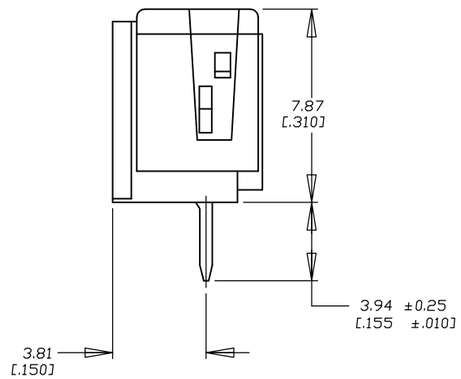


| | 'B' | | 'A' | | NO OF POSN | PART NUMBER |
|---|---|---|---|---|---|---|
| | 23.11 | [0.910] | 24.64 | [0.970] | 7 | 1-487925-4 |
| | 51.05 | [2.010] | 52.58 | [2.070] | 18 | 1-487925-3 |
| | 12.95 | [.510] | 14.48 | [.570] | 3 | 1-487925-2 |
| | 43.43 | [1.710] | 44.96 | [1.770] | 15 | 1-487925-1 |
| OBSOLETE | ~~38.35~~ | ~~[1.510]~~ | ~~39.88~~ | ~~[1.570]~~ | ~~13~~ | ~~1-487925-0~~ |
| | 35.81 | [1.410] | 37.34 | [1.470] | 12 | 487925-9 |
| | 33.27 | [1.310] | 34.80 | [1.370] | 11 | 487925-8 |
| OBSOLETE | ~~28.19~~ | ~~[1.110]~~ | ~~29.72~~ | ~~[1.170]~~ | ~~9~~ | ~~487925-7~~ |
| | 30.73 | [1.210] | 32.26 | [1.270] | 10 | 487925-6 |
| | 61.21 | [2.410] | 62.74 | [2.470] | 22 | 487925-5 |
| OBSOLETE | ~~56.13~~ | ~~[2.210]~~ | ~~57.66~~ | ~~[2.270]~~ | ~~20~~ | ~~487925-4~~ |
| | 45.97 | [1.810] | 47.50 | [1.870] | 16 | 487925-3 |
| | 40.89 | [1.610] | 42.42 | [1.670] | 14 | 487925-2 |
| | 25.65 | [1.010] | 27.18 | [1.070] | 8 | 487925-1 |

1. FLAME RETARDANT THERMOPLASTIC; COLOR-BLACK
2. FINISH: 0.00381 [.000150] MIN THK TIN OVER 0.00127 [.000050] MIN THK NICKEL ON ENTIRE CONTACT.
3. CONNECTOR SUPPLIED IN CLOSED CONDITION.

THIS DRAWING IS A CONTROLLED DOCUMENT.

DIMENSIONS: mm

TOLERANCES UNLESS OTHERWISE SPECIFIED:

| | |
|---|---|
| 0 PLC | ± – |
| 1 PLC | ± – |
| 2 PLC | ± – |
| 3 PLC | ± .005 |
| 4 PLC | ± – |
| ANGLES | ± – |

MATERIAL: HOUSING&STUFFER: 1 CONTACTS: PH/Br

FINISH: CONTACTS 2

DWN D.KEITZER 30OCT89
CHK C OBERMAN 2NOV89
APVD SE IFONG
PRODUCT SPEC 108-16025
APPLICATION SPEC 114-16014
WEIGHT –

TE Connectivity

NAME: CONNECTOR ASSEMBLY, .100CL, ZIF-LINE 50 –

| SIZE | CAGE CODE | DRAWING NO | RESTRICTED TO |
|---|---|---|---|
| A3 | 00779 | C-487925 | – |

CUSTOMER DRAWING | SCALE 8:1 | SHEET 1 OF 1 | REV F5