REVISIONS					
REV	ECO	DESCRIPTION	DATE	BY	APPR
A1	--	FIRST RELEASED	Aug-30-2018	White	Tommy
A2	--	UPDATED DRAWING	Sep-14-2018	White	Tommy
A3	--	UPDATED DRAWING	Jan-09-2019	White	Tommy

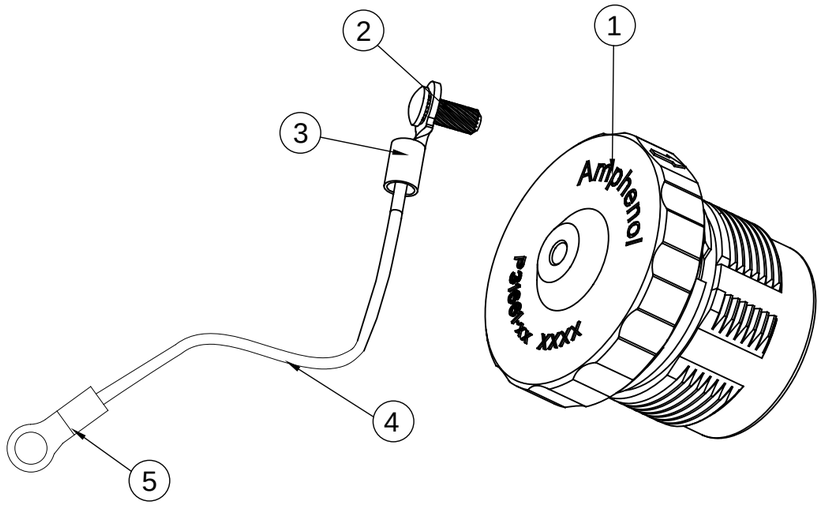

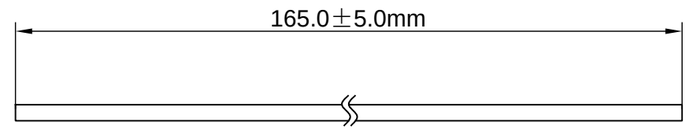

STAINLESS STEEL WIRE

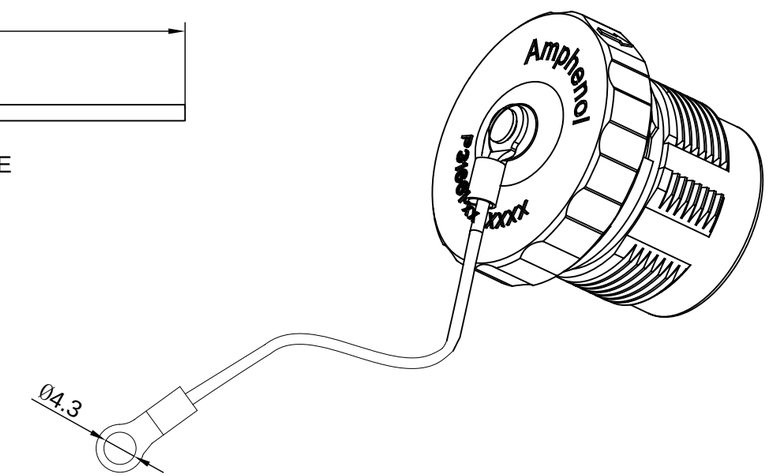

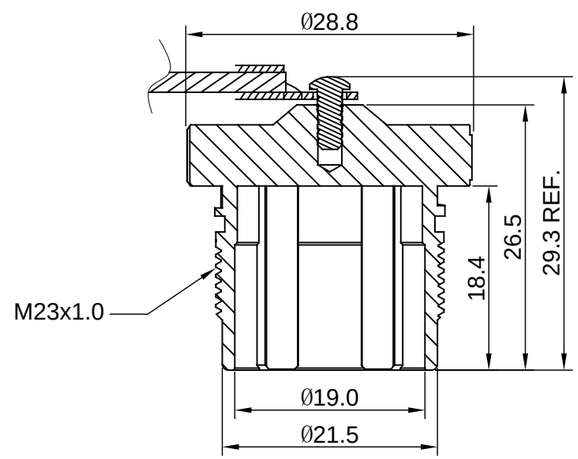

ITEM	P/N	NUT P/N	DESCRIPTION
1	P31661-06	CP-M0829-06	FOR M23B,CHECKMATE,PLUG,6POS
2	P31661-08	CP-M0829-08	FOR M23B,CHECKMATE,PLUG,8POS
3	P31661-09	CP-M0829-09	FOR M23B,CHECKMATE,PLUG,9POS

QUANTITY	PART NUMBER	DESCRIPTION	ITEM
1	RRNBL14	RING TERMIANL M4	5
165mm	RM0061	STAINLESS STEEL WIRE	4
1	RSC000021	RING TERMIANL M3	3
1	RM0084	RIVET,F2.5*6.35	2
1	SEE TABLE(NUT P/N)	METAL COUPLING NUT	1

MATERIALS LIST

NOTES : (UNLESS OTHERWISE SPECIFIED)

1. MATERIAL :
   NUT : ZINC DIE CAST, NICKEL PLATED.
   RIVET : STAINLESS STEEL.
   WIRE : STAINLESS STEEL.
2. SPECIFICATIONS :
   2.1 MATING CYCLES DURABILITY : 500 CYCLES MIN.
   2.2 IP--CLASS : IP67 (IN MATED CONDITION)
   2.3 RoHS COMPLIANT.
3. ALL DIMENSIONS ARE FOR REFERENCE USE ONLY.

UNLESS OTHERWISE SPECIFIED
1) All dimensions are in metric(mm).
2) Tolerances are as follows:
1 PL DEC ±0.30 | Fractions ±1/64
2 PL DEC ±0.15 | Angles ±1°
3 PL DEC ±0.08
3) Note reference = X

MATERIAL SPECIFICATIONS:

PROCESS SPECIFICATIONS:

NEXT ASS'Y:

SIGNATURES		DATE
DRAWN:	White	Jan-09-2019
CHECKED:	Tod	Jan-09-2019
ENGINEER:		
APPROVAL:	Tommy	Jan-09-2019
CUSTOMER:		

THIS DRAWING IS SUPPLIED FOR INFORMATION ONLY. DESIGN FEATURES, SPECIFICATIONS AND PERFORMANCE DATA SHOWN HEREON ARE THE PROPERTY OF THE AMPHENOL CORPORATION. NO RIGHTS OF REPRODUCTION ARE IMPLIED. ALL DIMENSIONS ARE SUBJECT TO NORMAL MANUFACTURING VARIATIONS.

Amphenol
Sine Systems - www.amphenol-sine.com
44724 Morley Drive
Clinton Township, MI 48036

DUST CAP FOR
M23B CHECKMATE PLUG

SIZE	TYPE	DWG NO:	REVISION
B	C-	P31661-XX	A3

SCALE: NONE SHEET 1 OF 1

TITLE: DUST CAP FOR M23B CHECKMATE PLUG
DWG NO: P31661-XX
REV: A3
SH: 1
OF: 1