38634

NO. OF CIRCUITS	DIM. "A" mm	DIM. "A" in	DIM. "B" mm	DIM. "B" in	ASSEMBLY MATERIAL NO. (STANDARD)	ASSEMBLY MATERIAL NO. (-50 OPT)
02	25.9	1.02	11.11	.438	386344302	386345102
03	37.0	1.46	22.23	.875	386344303	386345103
04	48.1	1.89	33.34	1.313	386344304	386345104
05	59.2	2.33	44.45	1.750	386344305	386345105
06	70.3	2.77	55.56	2.188	386344306	386345106
07	81.5	3.21	66.68	2.625	386344307	386345107
08	92.6	3.64	77.79	3.063	386344308	386345108
09	103.7	4.08	88.90	3.500	386344309	386345109
10	114.8	4.52	100.01	3.938	386344310	386345110
11	125.9	4.96	111.13	4.375	386344311	386345111
12	137.0	5.39	122.24	4.813	386344312	386345112
13	148.1	5.83	133.35	5.250	386344313	386345113
14	159.2	6.27	144.46	5.688	386344314	386345114
15	170.4	6.71	155.58	6.125	386344315	386345115
16	181.5	7.14	166.69	6.563	386344316	386345116
17	192.6	7.58	177.80	7.000	386344317	386345117
18	203.7	8.02	188.91	7.438	386344318	386345118
19	214.8	8.46	200.03	7.875	386344319	386345119
20	225.9	8.89	211.14	8.313	386344320	386345120
					(B)	(B)

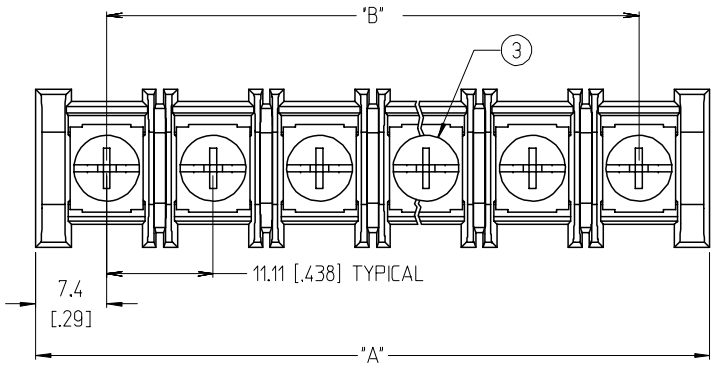

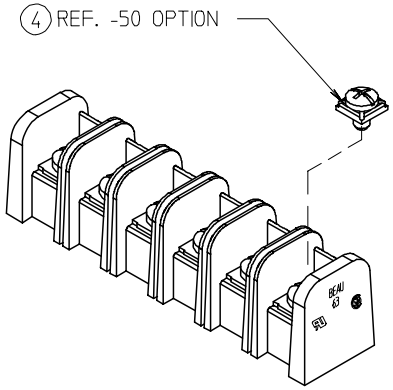

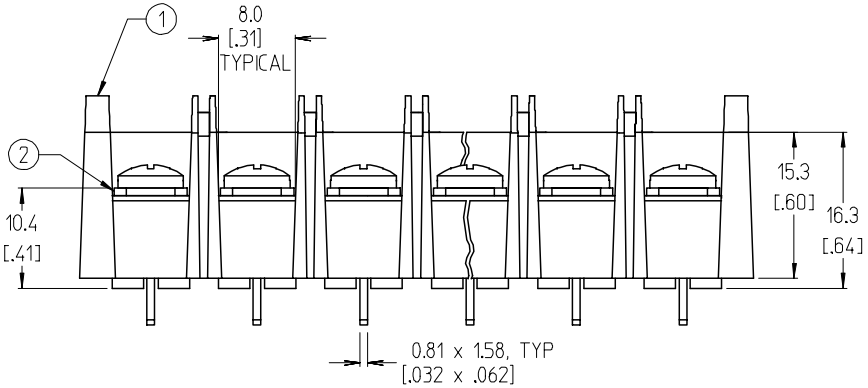

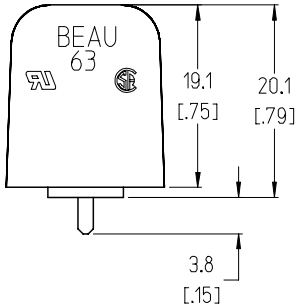

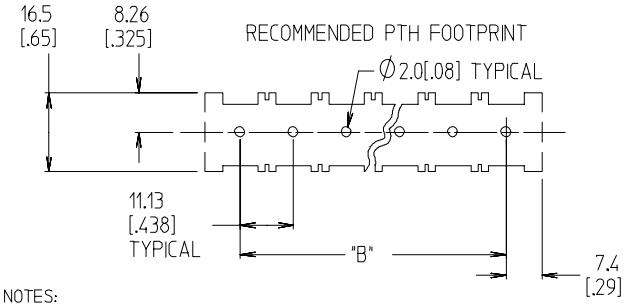

NOTES:

1. MATERIAL: SEE TABLE
2. FINISHES: SEE TABLE
3. INCH DIMS ARE SHOWN IN BRACKETS [XXX].
4. "XX" REFERS TO THE QUANTITY OF CIRCUITS.
5. (B) ASSEMBLY IS ROHS COMPLIANT.

ITEM	QTY.	DESCRIPTION	MATERIAL	FINISH
4	XX	SCREW&WASHER, #6-32X.25, PAN, PH/SL, -50	STEEL	ZN, CLEAR CHROMATE
3	XX	SCREW, #6-32X.25, BHD, PH/SL, STANDARD	STEEL	ZN, CLEAR CHROMATE
2	XX	TERMINAL, PC	BRASS	TIN PLATED
1	1	HOUSING, SR BTS, PC, CS, NO MTG.	PBT	BLACK

REV	DESCRIPTION
B	ADD MAT'L # & NOTE EC NO: ETC2007-0392 DRWN:CLYORK 2007/05/11 CH'KD:JMACNEIL 2007/05/11 APPR:JMACNEIL 2007/05/14

QUALITY SYMBOLS: ▼=0 ▽=0

GENERAL TOLERANCES (UNLESS SPECIFIED)

	mm	INCH
4 PLACES	± ---	± ---
3 PLACES	± ---	± .005
2 PLACES	± 0.13	± .01
1 PLACE	± 0.3	± ---
ANGULAR ± 2 °		

DRAFT WHERE APPLICABLE MUST REMAIN WITHIN DIMENSIONS

DIMENSION STYLE: MM/IN

SCALE: 2:1

DESIGN UNITS: INCH

THIRD ANGLE PROJECTION

DRAWN BY	W. HOWARD	DATE 2003/07/16
CHECKED BY	R. KEMP	DATE 2003/07/18
APPROVED BY	P. WALTZ	DATE 2003/07/18

TITLE: 11.11MM SR BTS, PC, CLOSED SIDE ASSY, NO MTG, 600V, BEAU 63R

molex MOLEX INCORPORATED

MATERIAL NO.: SEE CHART

DOCUMENT NO.: SD-38634-001

SHEET NO.: 1 OF 1

SIZE: B

THIS DRAWING CONTAINS INFORMATION THAT IS PROPRIETARY TO MOLEX INCORPORATED AND SHOULD NOT BE USED WITHOUT WRITTEN PERMISSION