MATERIAL NUMBER	# OF COLUMNS	DIM. "A" MAX.	DIM. "B"
76020-**04	4	22.20	11.10
76020-**06	6	29.60	18.50
76020-**10	10	44.40	33.30

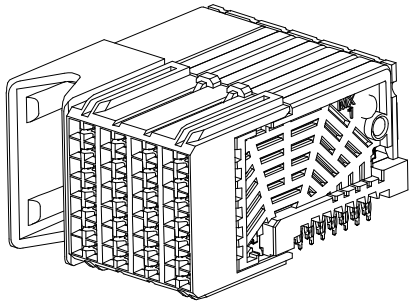

76020-****

MODULE TYPE -- TAIL PLATING TYPE
GUIDE LEFT -- TIN/LEAD = 2
GUIDE LEFT -- TIN ONLY = 3

POLARIZATION KEY ORIENTATION
0 = NO KEY
1 = A
2 = B
3 = C
4 = D
5 = E
6 = F
7 = G
8 = H

# OF COLUMNS
04 = 4 COL
06 = 6 COL
10 = 10 COL
54 = 4 COL W/ ESD CLIP
56 = 6 COL W/ESD CLIP
50 = 10 COL W/ESD CLIP

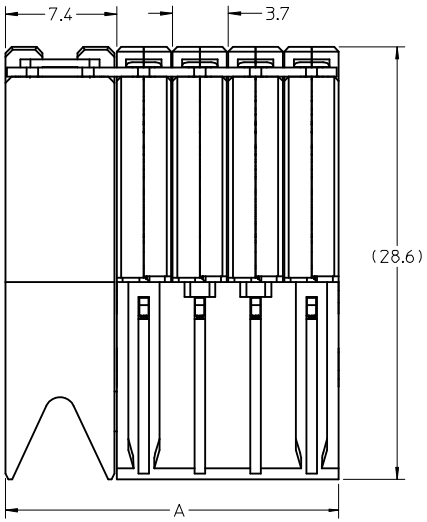

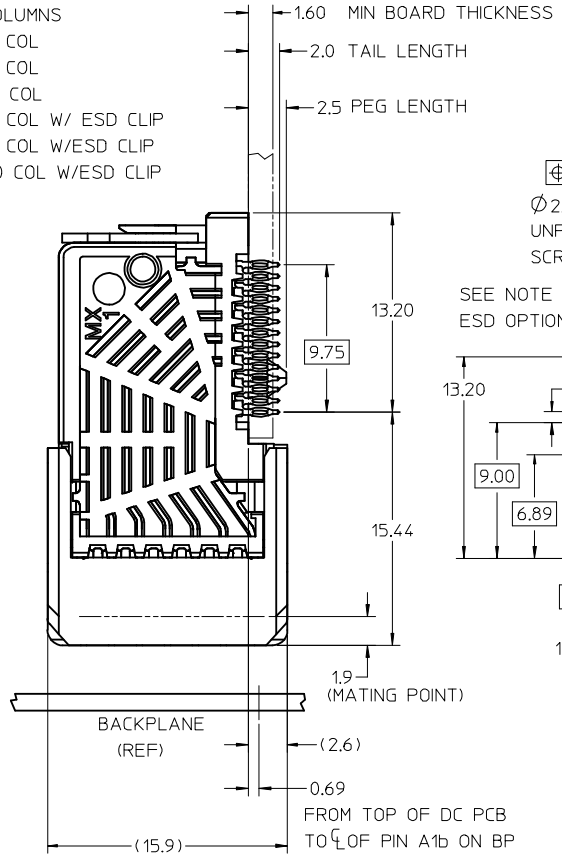

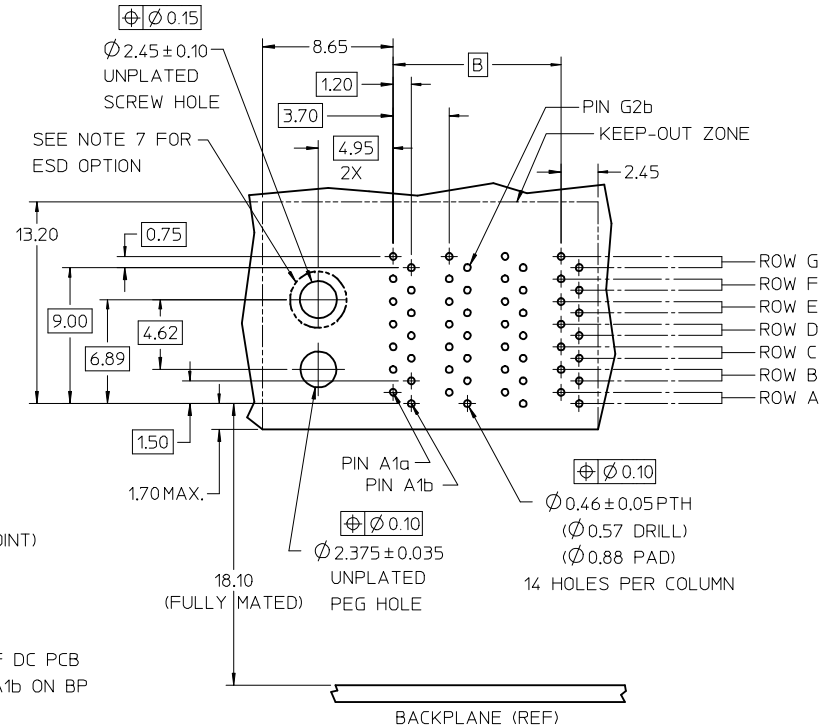

KEY SHOWN IN
POSITION "H"

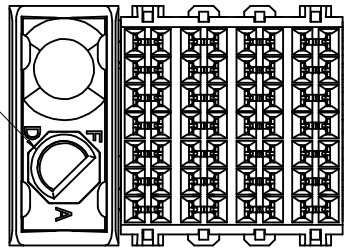

DAUGHTERCARD HOLE PATTERN (CONNECTOR SIDE)

NOTES:
1. MATERIALS: HOUSING - LIQUID CRYSTAL POLYMER (LCP) GLASS-FILLED, UL 94V-0
   TERMINALS - HIGH PERFORMANCE COPPER ALLOY
2. FINISH: 30uIN MIN. GOLD IN CONTACT AREA
   SELECTIVE TIN/LEAD (-2***) OR SELECTIVE TIN (-3***)
   ON PCB TAILS. NICKEL OVERALL.
3. REFER TO MOLEX PRODUCT SPECIFICATION PS-75710-999 FOR PERFORMANCE SPECS.
4. PRODUCT IS PACKAGED PER PK-70873-607.
5. THIS PART CONFORMS TO CLASS B REQUIREMENTS OF COSMETIC SPEC PS-45499-002.
6. GUIDED PARTS TO BE SHIPPED WITH 2-32 TYPE AB
   SELF-TAPPING SCREW P/N 73726-0005.
7. FOR GROUNDED GUIDE MODULES USE DIA 2.45+/-0.10 (PTH), DIA 2.58 (DRILL),
   AND DIA 4.50 (PAD).

REV	DESCRIPTION
B	ADD ESD OPTION EC NO: UCP2008-2813 DRWN:MCARRANZA 2008/09/04 CHKD:JLAURX 2008/09/10 APPR:JLAURX 2008/09/11

QUALITY SYMBOLS
▼=0
▽=0

GENERAL TOLERANCES (UNLESS SPECIFIED)	mm	INCH
4 PLACES	± ---	± ---
3 PLACES	± ---	± ---
2 PLACES	± 0.13	± ---
1 PLACE	± 0.25	± ---
ANGULAR ±1/2°		

DRAFT WHERE APPLICABLE MUST REMAIN WITHIN DIMENSIONS

DIMENSION STYLE: MM ONLY	SCALE: 4:1	DESIGN UNITS: METRIC	THIRD ANGLE PROJECTION
DRAWN BY: MCARRANZA	DATE: 3/20/06	TITLE: I-TRAC DAUGHTERCARD 7 ROW GUIDE LEFT SIGNAL MODULE	
CHECKED BY: BPISZCZOR	DATE: 2007/03/07		
APPROVED BY: JLAURX	DATE: 2007/03/07	MOLEX INCORPORATED	
MATERIAL NO.: SEE CHART		DOCUMENT NO.: SD-76020-002	SHEET NO.: 1 OF 1
SIZE: C			

THIS DRAWING CONTAINS INFORMATION THAT IS PROPRIETARY TO MOLEX INCORPORATED AND SHOULD NOT BE USED WITHOUT WRITTEN PERMISSION