THIS DRAWING IS UNPUBLISHED. RELEASED FOR PUBLICATION 20
© COPYRIGHT 20 BY - ALL RIGHTS RESERVED.

REVISIONS					
P	LTR	DESCRIPTION	DATE	DWN	APVD
	D	REDRAWN/REVISED PER ECO-17-001755	04DEC2017	KS	JO

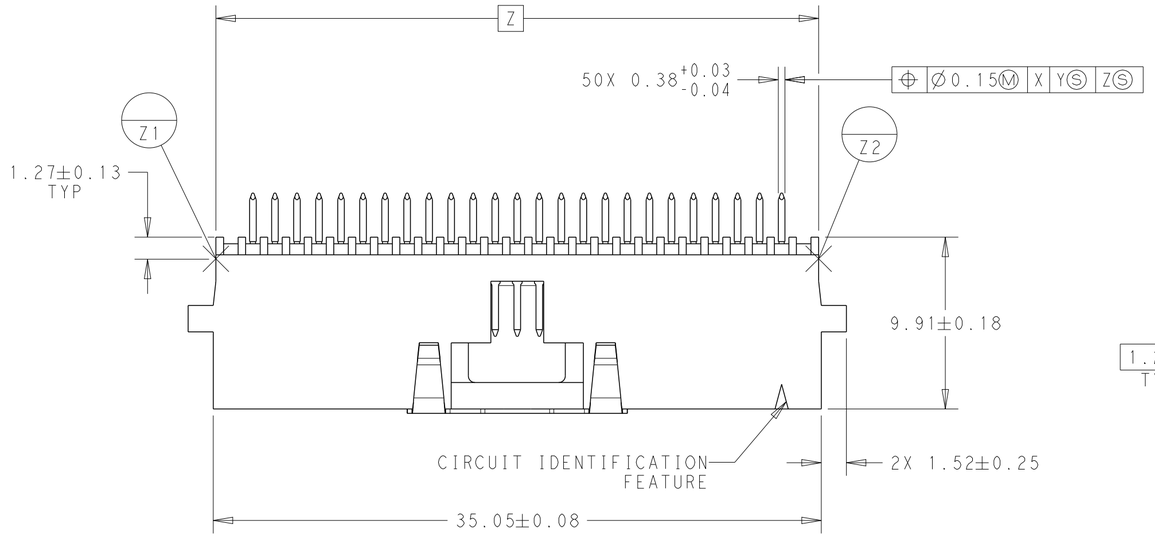

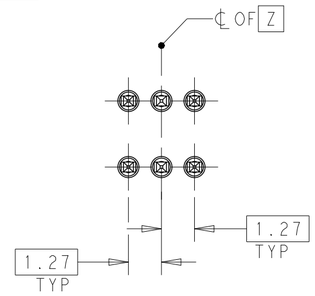

SCALE 6:1

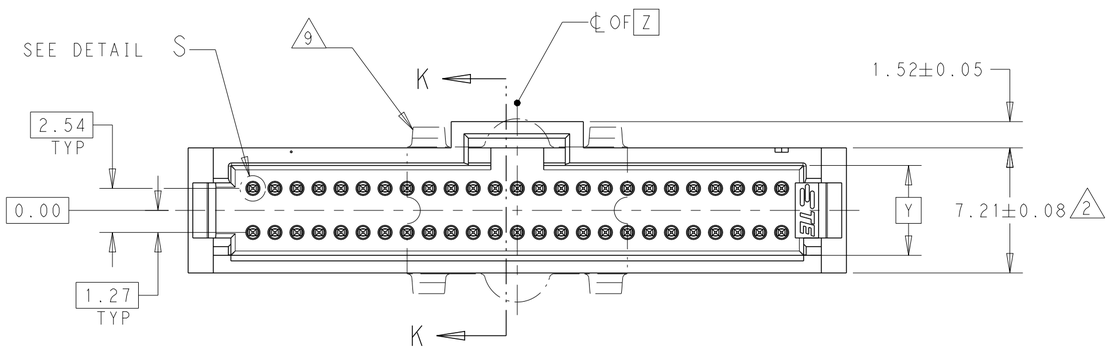

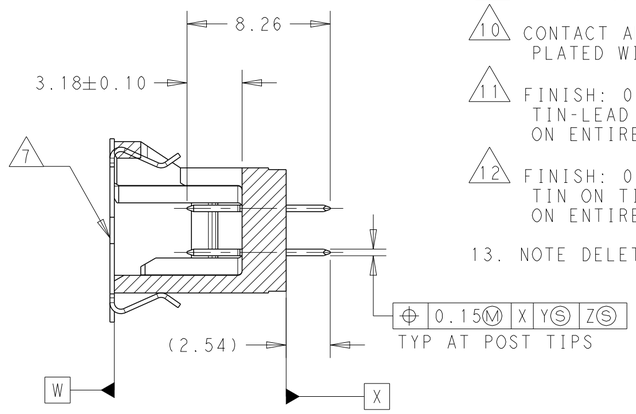

SECTION K-K

1. CONTACT AREAS PLATED WITH 0.76µm MIN GOLD; SOLDER TAILS PLATED WITH 3.81µm MIN TIN-LEAD, ALL OVER 1.27µm NICKE
2. DIMENSION APPLIES AT BASE OF SHROUD
3. NOTE DELETED.
4. PACKAGED IN TAPE & REEL PER EIA-481 SPECIFICATIONS. SEE CHART FOR TAPE WIDTHS.
5. DATUMS AND BASIC DIMENSIONS ESTABLISHED BY CUSTOMER.
6. HOUSING:LCP, COLOR-BLACK. POST:COPPER ALLOY. VACUUM COVER:ALUMINUM.
7. VACUUM COVER DESIGNED FOR 4 DIA. NOZZLE. VACUUM COVER TO BE REMOVED AFTER SOLDERING.
8. 6.75 MIN TARGET AREA FOR VACUUM PICK-UP.
9. VACUUM COVER SHOWN IN PHANTOM LINE.
10. CONTACT AREAS PLATED WITH 0.76µm MIN GOLD;SOLDER TAILS PLATED WITH 3.81µm MIN TIN,ALL OVER 1.27µm NICKE
11. FINISH: 0.03µm MIN GOLD ON GOLD PLATED AREA,3.81µm MATTE TIN-LEAD ON TIN PLATED AREA.UNDER PLATING TO BE 1.27µm NICKEL ON ENTIRE CONTACT.GOLD AND TIN PLATING MAY NOT OVERLAP.
12. FINISH: 0.03µm MIN GOLD ON GOLD PLATED AREA,3.81µm MATTE TIN ON TIN PLATED AREA.UNDER PLATING TO BE 1.27µm NICKEL ON ENTIRE CONTACT.GOLD AND TIN PLATING MAY NOT OVERLAP.
13. NOTE DELETED.

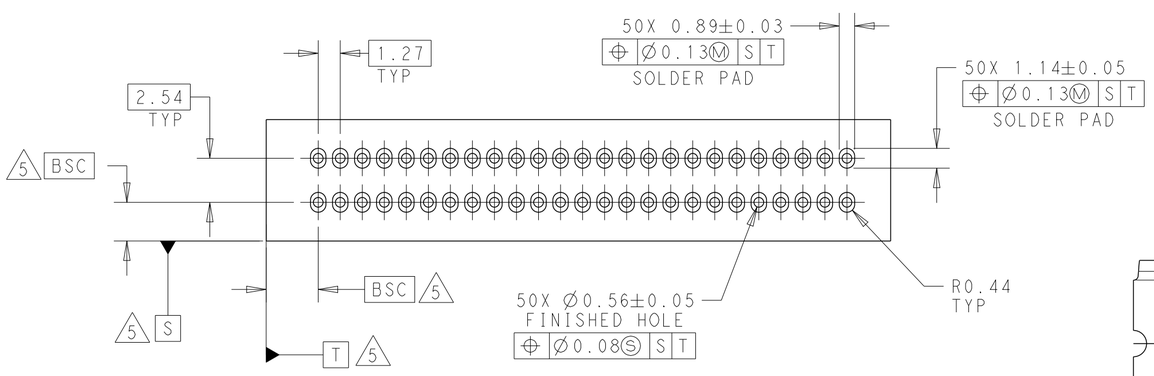

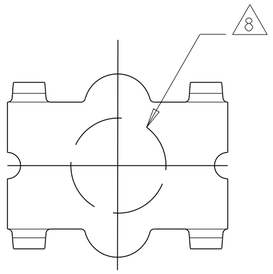

VACUUM COVER

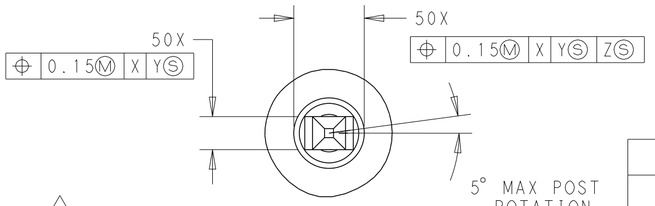

DETAIL S
SCALE 20:1

FINISH	TAPE WIDTH	NO OF POSN	PART NUMBER
12	72	50	7-147380-1
10	72	50	5-147380-1
11	72	50	2-147380-1
1	72	50	147380-2

THIS DRAWING IS A CONTROLLED DOCUMENT.

DIMENSIONS: mm

TOLERANCES UNLESS OTHERWISE SPECIFIED:
0 PLC ±-
1 PLC ±0.3
2 PLC ±0.13
3 PLC ±0.080
4 PLC ±0.0005
ANGLES ±0.5°

MATERIAL 6
FINISH SEE NOTE

DWN K.SHRISHAIL 04DEC2017
CHK J.OLSON 04DEC2017
APVD J.OLSON 04DEC2017
PRODUCT SPEC 108-1093
APPLICATION SPEC 114-25031
WEIGHT -

TE Connectivity

NAME HEADER ASEEMBLY, VERTICAL, DUAL ROW, System 50, AMPMODU
-

SIZE A2 | CAGE CODE 00779 | DRAWING NO C-147380 | RESTRICTED TO -

CUSTOMER DRAWING | SCALE 4:1 | SHEET 1 OF 1 | REV D