AWM42150VH

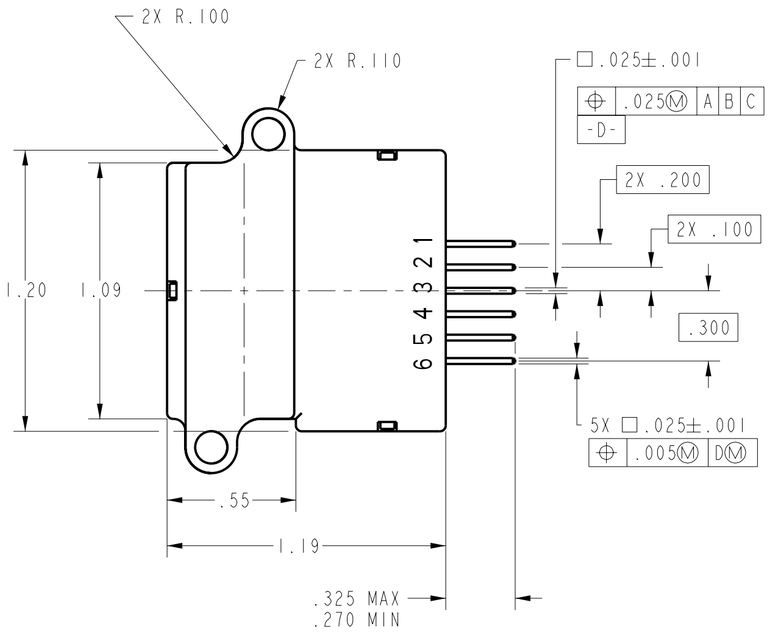

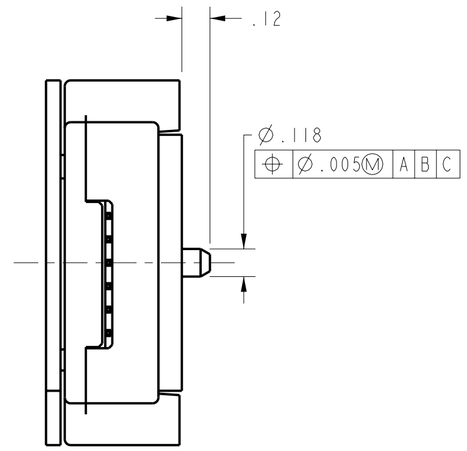

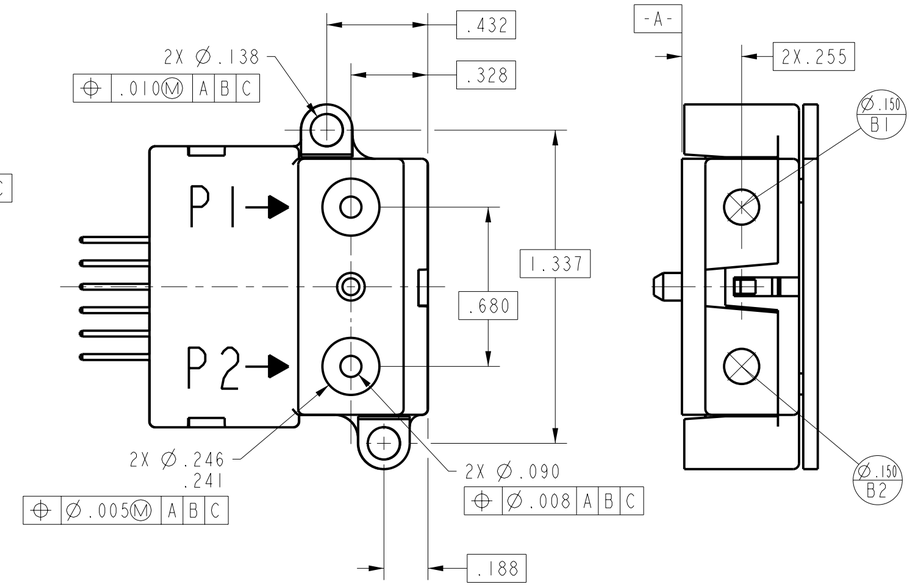

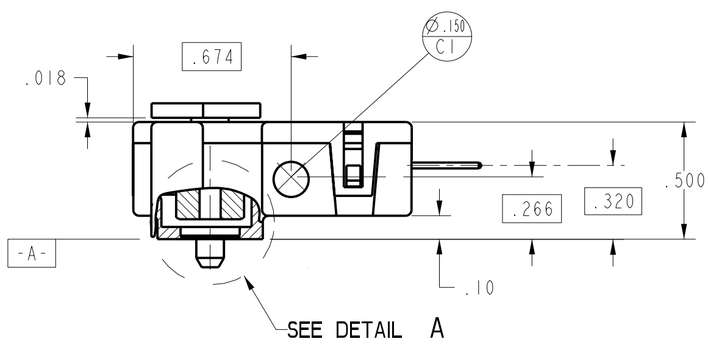

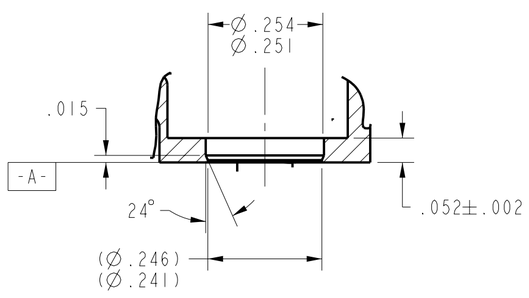

DETAIL A
SCALE 4:1

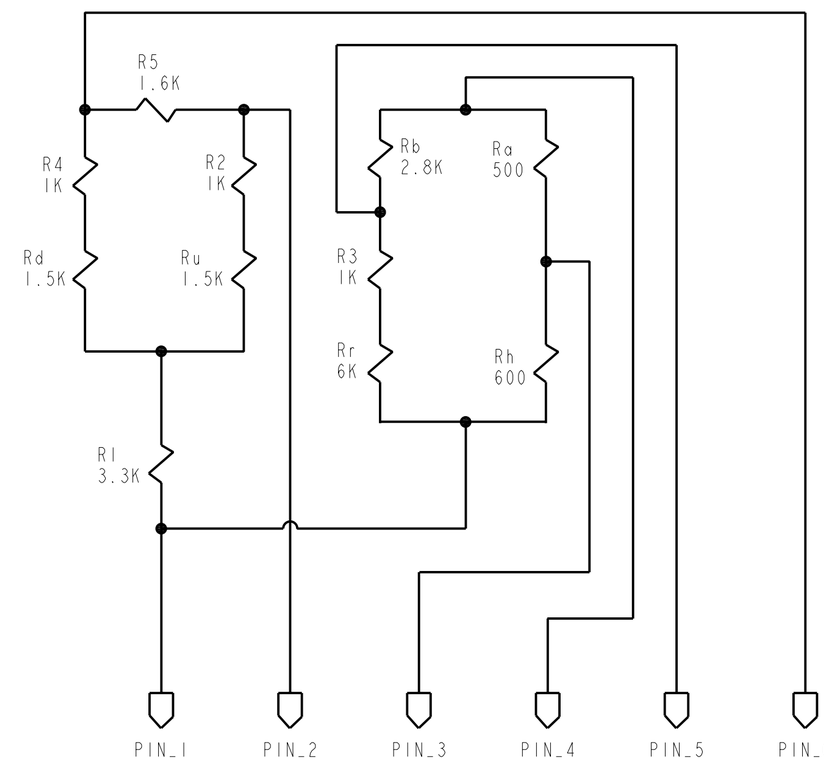

RECOMMENDED EXCITATION	10 ± 0.01 VDC
MIN/MAX POWER SUPPLY	8.0/15.0 VDC
POWER CONSUMPTION	30mW
NULL OUTPUT	0 ± 1 mV
OUTPUT AT 25 SCCM	8.5 ± 1.5 mV
PEPEATABILITY AND HYSTERESIS	±.35 % FSO TYP
TEMPERATURE RANGE OPERATING STORAGE	 -25°C TO +85°C -40°C TO +125°C
TERMINATION (.100 CENTERS)	.025 SQUARE
WEIGHT	30 GRAMS
SHOCK RATING (5 DROPS, EACH OF 6 AXES)	100g PEAK
OVERPRESSURE	250 PSI MAX
MAXIMUM TORQUE PER LUG	6 IN/LBS MAX

THIRD ANGLE PROJECTION

SCALE 2:1

DO NOT SCALE PRINT

UNLESS OTHERWISE SPECIFIED TOLERANCES ARE

ONE PLACE	(.0)	±.030
TWO PLACES	(.00)	±.015
THREE PLACES	(.000)	±.005
ANGLES		±

WEIGHT

THIS DRAWING COVERS A PROPRIETARY ITEM AND IS THE PROPERTY OF MICRO SWITCH. A DIVISION OF HONEYWELL. THIS DRAWING IS NOT TO BE COPIED OR USED WITHOUT THE APPROVAL OF MICRO SWITCH.

MICROSWITCH a Honeywell Division
FED. MFG. CODE 91929

MASS AIRFLOW SENSOR

CATALOG LISTING
AWM42150VH

MASTER REDUCED
ANSI Y14.5M-1982 APPLIES

AWM42150VH
PAGE OF
RELEASE NO. PR-21994
REPLACES X99757-AW
DRAWING NUMBER
ISSUE 1
REVISIONS
CHECK
CHECK
CHECK
CHECK
PTC/CAD
DRAWN MAM 6MAR96