RM84 / RM85 / RM87

Miniature Electromagnetic Relays

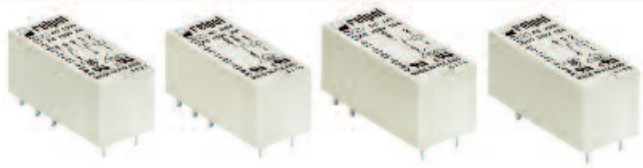

E105728

- Miniature dimensions
- 5000 V / 10 mm reinforced insulation
- Available special versions with the increased dielectric strength of the contact clearance
- IP67 flux proof, water proof and sealed cover protection (For IP40 unsealed, contact Altech)
- Cadmium - free contacts
- For PCB and plug-in sockets

		RM84	RM85	RM87
Contact Data				
No. and type of contacts		**DPDT. DPST (2NO)**	**SPDT. SPST (1NO)**	**SPDT. SPST (1NO)**
Contact material		AgNi	AgNi	AgNi
Rated / max. switching voltage	AC	250 V / 440 V	250 V / 440 V	250 V / 440 V
Min. switching voltage		5 V	5 V	5 V
Rated load (capacity)	AC1	8 A / 250 V AC	16 A / 250 V AC	12 A / 250 V AC
	AC15	3 A / 120 V; 1.5 A / 240 V (B300)	3 A / 120 V; 1.5 A / 240 V (B300)	3 A / 120 V; 1.5 A / 240 V (B300)
	AC3	550 W (single-phase motor)	750 W (single-phase motor)	750 W (single-phase motor)
	DC1	8 A / 24 V DC (see Fig. 3.1)	16 A / 24 V DC (see Fig. 3.2)	12 A / 24 V DC (see Fig. 3.3)
	DC13	0.22 A / 120 V; 0.1 A / 250 V (R300)	0.22 A / 120 V; 0.1 A / 250 V (R300)	0.22 A / 120 V; 0.1 A / 250 V (R300)
Min. switching current		5 mA	5 mA	5 mA
Max. inrush current		12 A	24 A	18 A
Rated current		**8A**	**16 A**	**12 A**
Max. breaking capacity	AC1	2 000 VA	4 000 VA	3 000 VA
Min. breaking capacity		0.3 W	0.3 W	0.3 W
Contact resistance		≤ 100 mΩ	≤ 100 mΩ	≤ 100 mΩ
Max. operating frequency				
• at rated load	AC1	600 cycles/hour	600 cycles/hour	600 cycles/hour
• no load		72000 cycles/hour	72000 cycles/hour	72000 cycles/hour
Coil Data				
Rated voltage	50/60 Hz AC	12 ... 240 V	12 ... 240 V	12 ... 240 V
	DC	3 ... 110 V	3 ... 110 V	3 ... 110 V
Must release voltage		AC: ≥ 0.15 U_n ; DC: ≥ 0.1 U_n	AC: ≥ 0.15 U_n ; DC: ≥ 0.1 U_n	AC: ≥ 0.15 U_n ; DC: ≥ 0.1 U_n
Operating range of supply voltage		see page 80 and Fig. 4.1. 5.1	see page 80 and Fig. 4.2. 5.2	see page 80 and Fig. 4.3. 5.3
Rated power consumption	AC	0.75 VA	0.75 VA	0.75 VA
	DC	0.4 ... 0.48 W	0.4 ... 0.48 W	0.4 ... 0.48 W
Insulation				
Insulation rated voltage		400 V AC	400 V AC	400 V AC
Rated surge voltage		4000 V 1.2 / 50 µs	4000 V 1.2 / 50 µs	4000 V 1.2 / 50 µs
Overvoltage category		III	III	III
Insulation pollution degree		3	3	3
Dielectric strength				
• between coil and contacts		5000 V AC type of insulation: reinforced	5000 V AC type of insulation: reinforced	5000 V AC type of insulation: reinforced
• contact clearance		1000 V AC type of clearance: micro-disconnection 2000 V AC contacts DPST (2NO). type of clearance: full-disconnect	1000 V AC type of clearance: micro-disconnection 2000 V AC contacts DPST (2NO). type of clearance: full-disconnect	1000 V AC type of clearance: micro-disconnection 2000 V AC contacts SPST (1NO). type of clearance: full-disconnect
• pole - pole		2500 V AC type of insulation: basic	–	–
Contact - coil distance				
• clearance		≥ 10 mm	≥ 10 mm	≥ 10 mm
• creepage		≥ 10 mm	≥ 10 mm	≥ 10 mm
General data				
Operating / release time (typical values)		7 ms / 3 ms	7 ms / 3 ms	7 ms / 3 ms
Electrical life				
• resistive	AC1	> 10^5; 8 A. 250 V AC	> 0.7 x 10^5; 16 A. 250 V AC	> 10^5; 12 A. 250 V AC
• cosφ		see Fig. 2.1	see Fig. 2.2	see Fig. 2.3
• DC L/R=40 ms		> 10^5; 0.15 A. 220 V DC	> 10^5; 0.15 A. 220 V DC	> 10^5; 0.15 A. 220 V DC
Mechanical life (cycles)		> 3 x 10^7	> 3 x 10^7	> 3 x 10^7
Dimensions (L x W x H)		29 x 12.7 x 15.7 mm	29 x 12.7 x 15.7 mm	29 x 12.7 x 15.7 mm
Weight		14 g	14 g	14 g
Ambient temperature				
• storage		-40...+85 °C	40...+85 °C	40...+85 °C
• operating		AC: -40...+70 °C DC: -40...+85 °C	AC: -40...+70 °C DC: -40...+85 °C	AC: -40...+70 °C DC: -40...+85 °C
Cover protection category		IP 67 PN-EN 60529	IP 67 PN-EN 60529	IP 67 PN-EN 60529
Environmental protection		RTIII PN-EN 116000-3	RTIII PN-EN 116000-3	RTIII PN-EN 116000-3
Shock resistance	(NO/NC)	20 g	30 g	30 g
Vibration resistance		10 g / 5 g 10...150 Hz	10 g 10...150 Hz	10 g 10...150 Hz
Solder bath temperature		max. 270 °C	max. 270 °C	max. 270 °C
Soldering time		max. 5 s	max. 5 s	max. 5 s

DATA SUBJECT TO CHANGE WITHOUT NOTICE

RM84

E105728

CONNECTION DIAGRAM

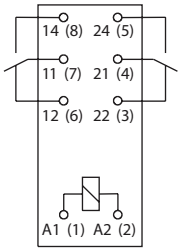

DPDT

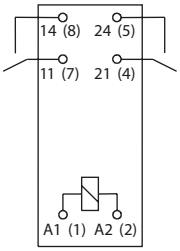

DPST (2NO)

Terminal (pin)	A1(1); A2(2)	22(3); 21(4); 24(5); 12(6); 11(7); 14(8)
[mm]	Ø 0.6	0.5 x 0.9
Drilling hole: • for relays • for sockets	 Ø 1.3 + 0.1 mm Ø 1.5 + 0.1 mm	

DIMENSIONS

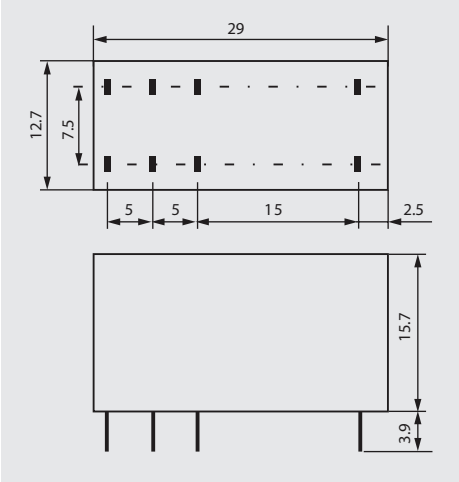

LOAD CHARTS

Electrical life at AC resistive load. Switching frequency: 600 cycles/hour Fig. 1.1

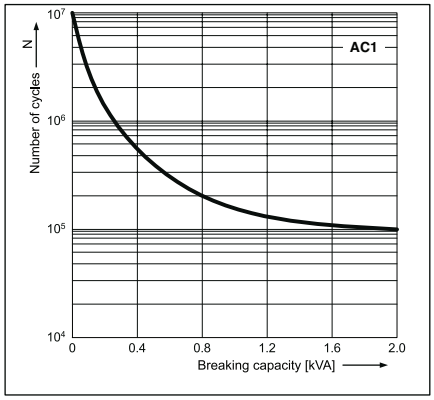

Electrical life reduction factor at AC inductive load Fig. 2.1

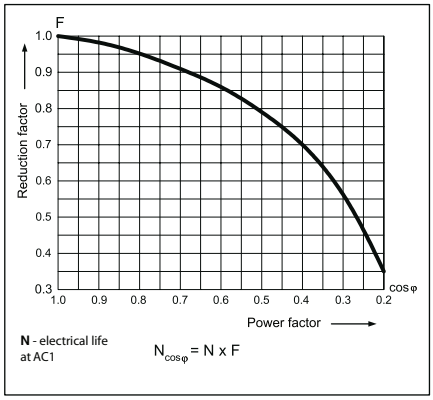

Max. DC resistive load breaking capacity Fig. 3.1

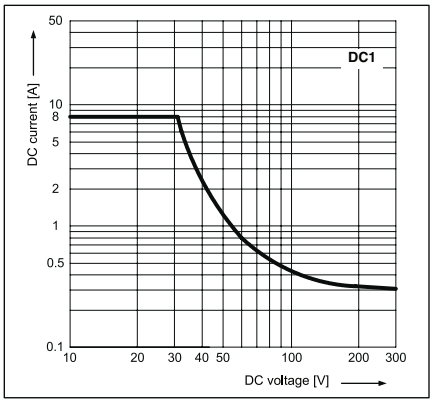

Coil operating range - DC Fig. 4.1

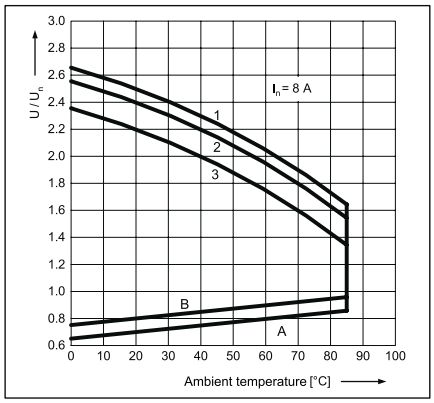

Coil operating range - AC 50 Hz Fig. 5.1

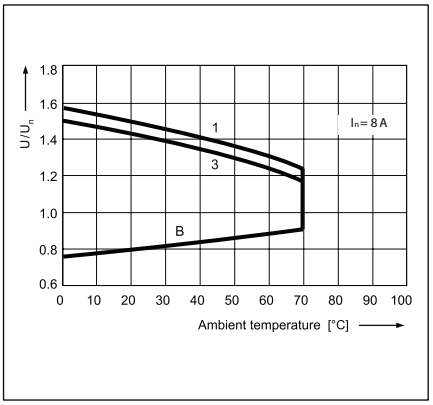

Description of Fig. 4.1 and 5.1

A - relations between make voltage and ambient temperature at no load on contacts. Coil temperature and ambient temperature are equal before coil energizing. Make voltage is not higher than the value read on Y axis (multiplication of rated voltage).
B - relations between make voltage and ambient temperature after initial coil heating up with 1,1 U_n, at continues load of I_n on contacts. Make voltage is not higher than the value read on Y axis (multiplication of rated voltage).
1, 2, 3 - values on Y axis represent allowed overvoltage on coil at certain ambient temperature and contact load:
1 - no load
2 - 50% of rated load
3 - rated load

DATA SUBJECT TO CHANGE WITHOUT NOTICE

RM85

E105728

CONNECTION DIAGRAM

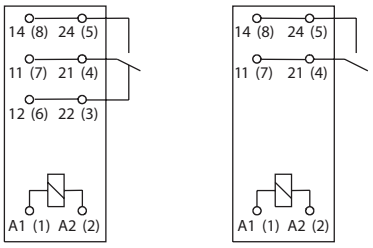

SPDT **SPST (1NO)**

Terminal (pin)	A1(1); A2(2)	22(3); 21(4); 24(5); 12(6); 11(7); 14(8)
[mm]	Ø 0.6	0.5 x 0.9
Drilling hole: • for relays • for sockets	 Ø 1.3 + 0.1 mm Ø 1.5 + 0.1 mm	

RM85 terminals are doubled for each contact.
Both terminals are to be used while connecting to load.

DIMENSIONS

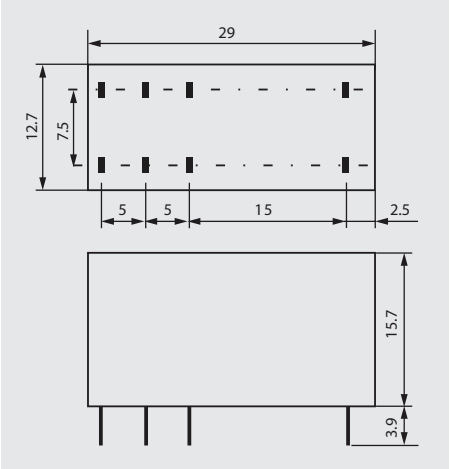

LOAD CHARTS

Electrical life at AC resistive load. Switching frequency: 600 cycles/hour Fig. 1.2

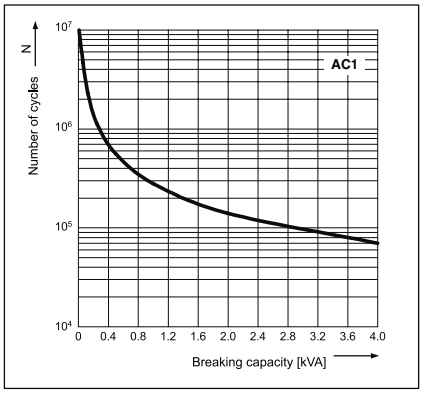

Electrical life reduction factor at AC inductive load Fig. 2.2

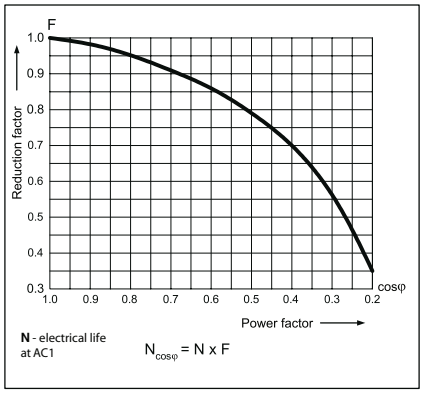

Max. DC resistive load breaking capacity Fig. 3.2

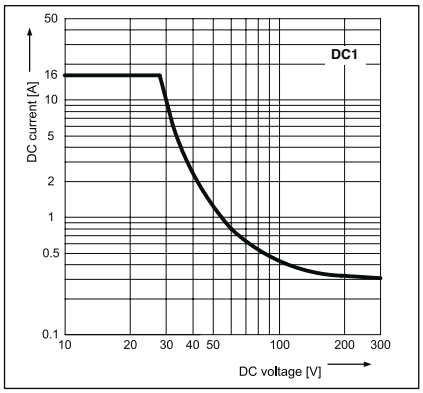

Coil operating range - DC Fig. 4.2

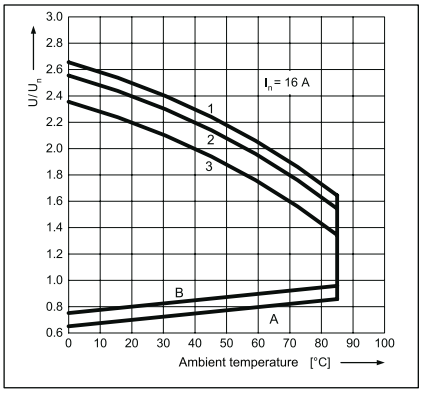

Coil operating range - AC 50 Hz Fig. 5.2

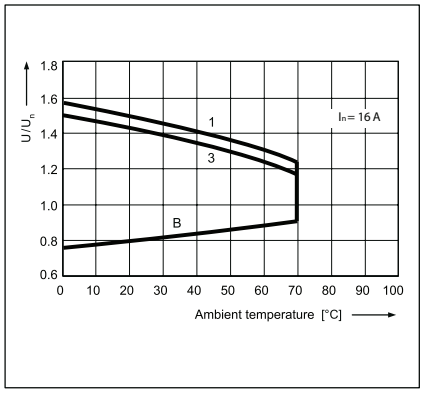

Description of Fig. 4.2 and 5.2

A - relations between make voltage and ambient temperature at no load on contacts. Coil temperature and ambient temperature are equal before coil energizing. Make voltage is not higher than the value read on Y axis (multiplication of rated voltage).
B - relations between make voltage and ambient temperature after initial coil heating up with 1,1 U_n, at continues load of I_n on contacts. Make voltage is not higher than the value read on Y axis (multiplication of rated voltage).
1, 2, 3 - values on Y axis represent allowed overvoltage on coil at certain ambient temperature and contact load:
1 - no load
2 - 50% of rated load
3 - rated load

DATA SUBJECT TO CHANGE WITHOUT NOTICE

RM87

E105728

CONNECTION DIAGRAM

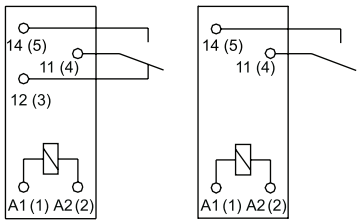

SPDT SPST (1NO)

Terminal (pin)	A1(1); A2(2)	12(3); 11(4); 14(5)
[mm]	Ø 0.6	0.5 x 0.9
Drilling hole: • for relays • for sockets	 Ø 1.3 + 0.1 mm Ø 1.5 + 0.1 mm	

DIMENSIONS

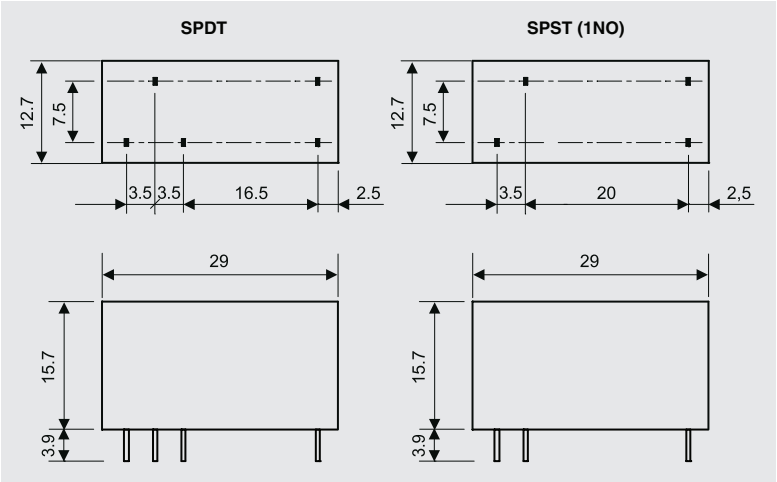

LOAD CHARTS

Electrical life at AC resistive load. Switching frequency: 600 cycles/hour Fig. 1.3

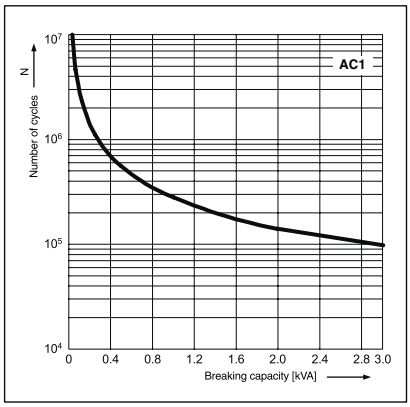

Electrical life reduction factor at AC inductive load Fig. 2.3

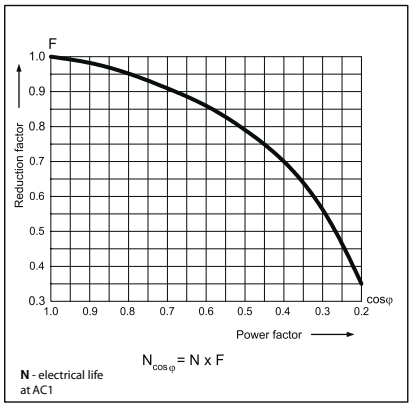

Max. DC resistive load breaking capacity - standard version Fig. 3.3

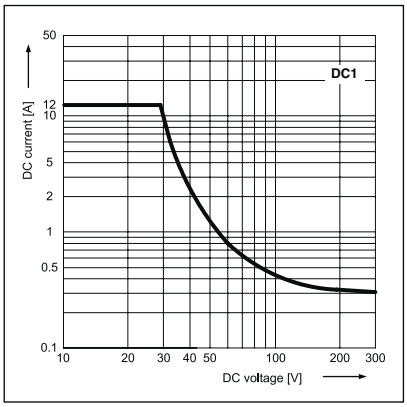

Coil operating range - DC - standard version Fig. 4.3

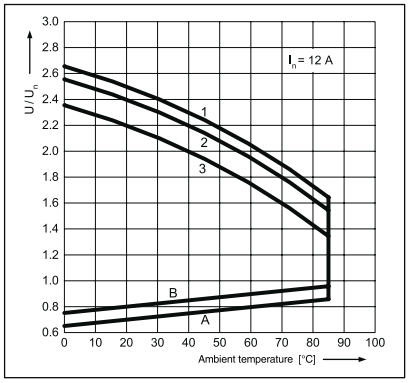

Coil operating range - AC 50 Hz Fig. 5.3

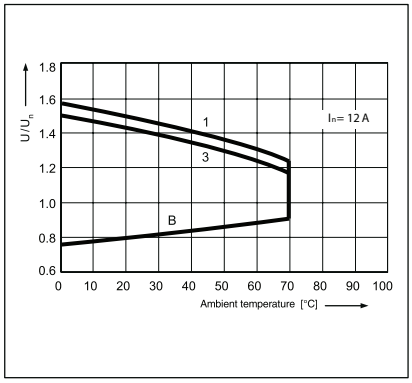

Description of Fig. 4.3 and 5.3

A - relations between make voltage and ambient temperature at no load on contacts. Coil temperature and ambient temperature are equal before coil energizing. Make voltage is not higher than the value read on Y axis (multiplication of rated voltage). **B** - relations between make voltage and ambient temperature after initial coil heating up with 1,1 U_n, at continues load of I_n on contacts. Make voltage is not higher than the value read on Y axis (multiplication of rated voltage).

1, 2, 3 - values on Y axis represent allowed overvoltage on coil at certain ambient temperature and contact load: **1** - no load; **2** - 50% of rated load; **3** - rated load

DATA SUBJECT TO CHANGE WITHOUT NOTICE

RM84 / RM85 / RM87

Miniature Electromagnetic Relays

R84 DPDT AC 50/60Hz & DC coil

Part Number	Coil Voltage (V)	Coil Type	Coil resistance at 20 °C in Ω	Coil operating range min. (at 20°C)	max. (at 55°C)
► **RM84-2012-35-1012**	12	DC	360	8.4	30.6
► **RM84-2012-35-1024**	24	DC	1440	16.8	61.2
RM84-2012-35-1110	110	DC	25200	77.0	280.0
► **RM84-2012-35-5120**	120	AC 50/60Hz	10200	96.0	144.0
► **RM84-2012-35-5230**	230	AC 50/60Hz	38500	184.0	276.0

R84 DPST(2NO) AC 50/60Hz & DC coil

Part Number	Coil Voltage (V)	Coil Type	Coil resistance at 20 °C in Ω	Coil operating range min. (at 20°C)	max. (at 55°C)
► **RM84-2022-35-1012**	12	DC	360	8.4	30.6
► **RM84-2022-35-1024**	24	DC	1440	16.8	61.2
RM84-2022-35-1110	110	DC	25200	77.0	280.0
► **RM84-2022-35-5120**	120	AC 50/60Hz	10200	96.0	144.0
► **RM84-2022-35-5230**	230	AC 50/60Hz	38500	184.0	276.0

R85 SPDT AC 50/60Hz & DC coil

Part Number	Coil Voltage (V)	Coil Type	Coil resistance at 20 °C in Ω	Coil operating range min. (at 20°C)	max. (at 55°C)
► **RM85-2011-35-1012**	12	DC	360	8.4	30.6
► **RM85-2011-35-1024**	24	DC	1440	16.8	61.2
RM85-2011-35-1110	110	DC	25200	77.0	280.0
► **RM85-2011-35-5120**	120	AC 50/60Hz	10200	96.0	144.0
► **RM85-2011-35-5230**	230	AC 50/60Hz	38500	184.0	276.0

R85 SPST(1NO) AC 50/60Hz & DC coil

Part Number	Coil Voltage (V)	Coil Type	Coil resistance at 20 °C in Ω	Coil operating range min. (at 20°C)	max. (at 55°C)
► **RM85-2021-35-1012**	12	DC	360	8.4	30.6
► **RM85-2021-35-1024**	24	DC	1440	16.8	61.2
RM85-2021-35-1110	110	DC	25200	77.0	280.0
► **RM85-2021-35-5120**	120	AC 50/60Hz	10200	96.0	144.0
► **RM85-2021-35-5230**	230	AC 50/60Hz	38500	184.0	276.0

R87 SPDT AC 50/60Hz & DC coil

Part Number	Coil Voltage (V)	Coil Type	Coil resistance at 20 °C in Ω	Coil operating range min. (at 20°C)	max. (at 55°C)
► **RM87N-2011-35-1012**	12	DC	360	8.4	30.6
► **RM87N-2011-35-1024**	24	DC	1440	16.8	61.2
RM87N-2011-35-1110	110	DC	25200	77.0	280.0
► **RM87N-2011-35-5120**	120	AC 50/60Hz	10200	96.0	144.0
► **RM87N-2011-35-5230**	230	AC 50/60Hz	38500	184.0	276.0

R87 SPST(1NO) AC 50/60Hz & DC coil

Part Number	Coil Voltage (V)	Coil Type	Coil resistance at 20 °C in Ω	Coil operating range min. (at 20°C)	max. (at 55°C)
► **RM87N-2021-35-1012**	12	DC	360	8.4	30.6
► **RM87N-2021-35-1024**	24	DC	1440	16.8	61.2
RM87N-2021-35-1110	110	DC	25200	77.0	280.0
► **RM87N-2021-35-5120**	120	AC 50/60Hz	10200	96.0	144.0
► **RM87N-2021-35-5230**	230	AC 50/60Hz	38500	184.0	276.0

* waterproof version

► **BOLD - Regular stocked items.**

DATA SUBJECT TO CHANGE WITHOUT NOTICE

GZT80 (for RM84 / RM85)

Screw terminals
Max. tightening moment
for the terminal: 0.7 Nm
35 mm rail mount
acc. to PN-EN 60715
or on panel mounting
75.3 x 15.5 x 61(67) mm*
Two poles, 5 mm pinout
12 A, 300 V AC

E22891

CONNECTION DIAGRAM

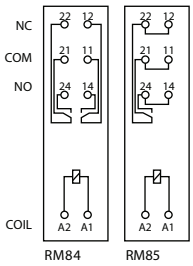

DIMENSIONS

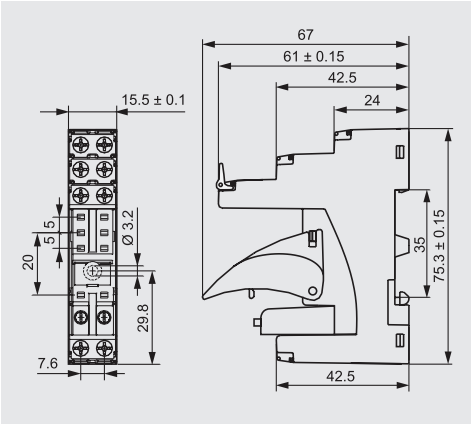

ZGGZ80 *(see page 110)*

GZT80-0040

GZM80-0041**

GZT80-0035

Module type M... *(see page 113)*

GZM80 (for RM84 / RM85)

Screw terminals
Max. tightening moment
for the terminal: 0.7 Nm
35 mm rail mount
acc. to PN-EN 60715
or on panel mounting
78.1 x 15.9 x 61(66.5) mm*
Two poles, 5 mm pinout
12 A, 300 V AC

E22891

CONNECTION DIAGRAM

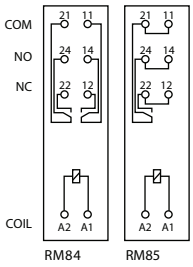

DIMENSIONS

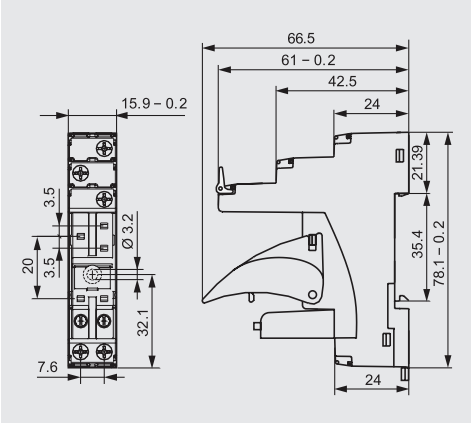

ZGGZ80 *(see page 110)*

GZT80-0040

GZM80-0041**

GZT80-0035

Module type M... *(see page 113)*

* In parenthesis is the height of the socket with plastic retainer clip. ** For lower profile application.

All accessories are sold separately.

DATA SUBJECT TO CHANGE WITHOUT NOTICE

GZT92 (for RM87)

Screw terminals
Max. tightening moment
for the terminal: 0.7 Nm
35 mm rail mount
acc. to PN-EN 60715
or on panel mounting
75.3 x 15.5 x 61(67) mm*
One pole, 3,5 mm
12 A, 300 V AC

E22891

GZT92

ZGGZ80 *(see page 110)*

CONNECTION DIAGRAM

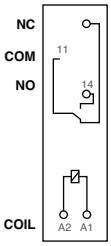

RM87

DIMENSIONS

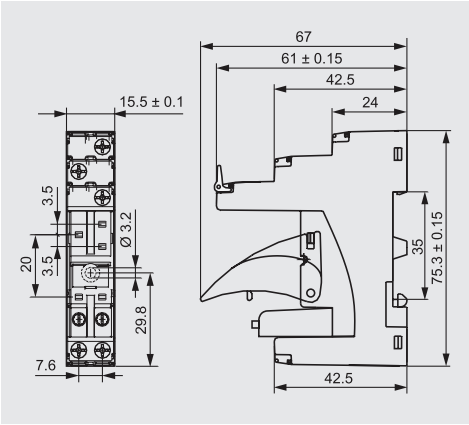

GZT80-0040

GZM80-0041**

GZT80-0035

Module type M... *(see page 113)*

GZM92 (for RM87)

Screw terminals
Max. tightening moment
for the terminal: 0.7 Nm
35 mm rail mount
acc. to PN-EN 60715
or on panel mounting
78.1 x 15.9 x 61(66.5) mm*
One pole, 3,5 mm pinout
12 A, 300 V AC

E22891

GZM92

ZGGZ80 *(see page 110)*

CONNECTION DIAGRAM

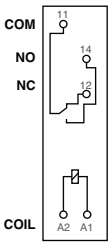

RM87

DIMENSIONS

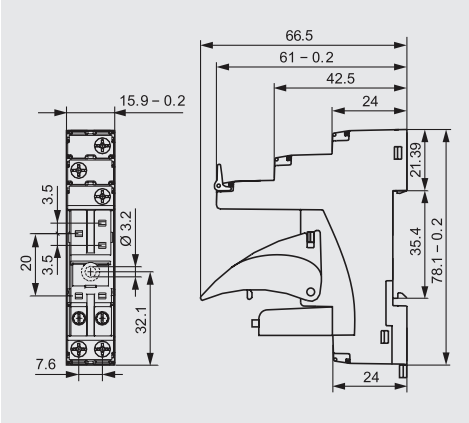

GZT80-0040

GZM80-0041**

GZT80-0035

Module type M... *(see page 113)*

* In parenthesis is the height of the socket with plastic retainer clip. ** For lower profile application.

All accessories are sold separately.

DATA SUBJECT TO CHANGE WITHOUT NOTICE

GZMB80 (for RM84, RM85)

Spring terminals
Max. cross section of the cables:
1 x 0.2...1.5 mm2
(1 x 24...16 AWG)
Stripping length deinsulation:
9...11 mm
35 mm rail mount
acc. to PN-EN 60715
97 x 16 x 45.2(69) mm*
Two poles, 5 mm pinout
10 A, 300 V AC

E22891

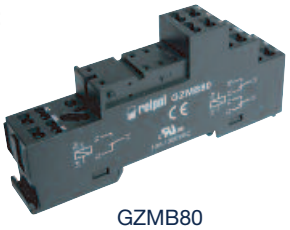

GZMB80

CONNECTION DIAGRAM

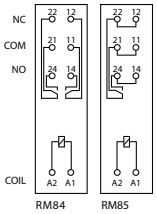

DIMENSIONS

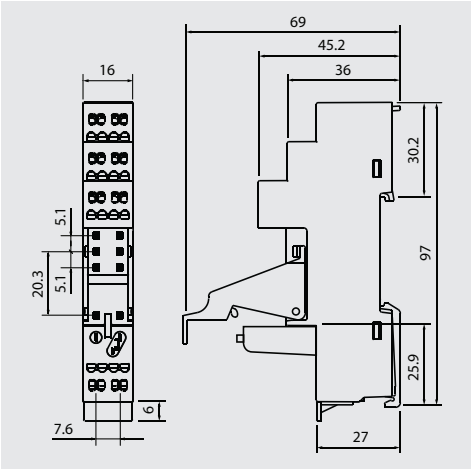

GZMB80-0040

GZM80-0041**

TR

Module type M... *(see page 113)*

GD50 (for RM84, RM85)

For RM84, RM85

For PCB
31.5 x 13 x 9 mm
Two poles, 5 mm pinout
8 A, 300 V AC

E22891

GD50

CONNECTION DIAGRAM

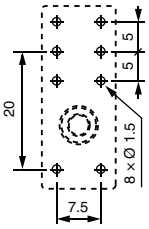

DIMENSIONS

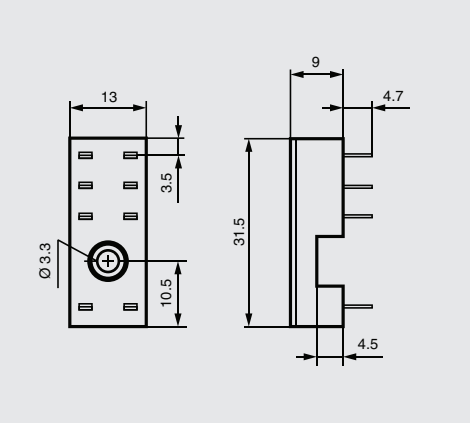

MH16-2

GD35 (for RM87N)

For RM87

For PCB
31.5 x 13 x 9 mm
One pole, 3.5 mm pinout
12 A, 300 V AC

E22891

GD35

CONNECTION DIAGRAM

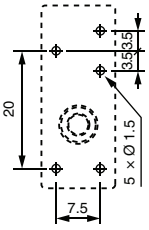

DIMENSIONS

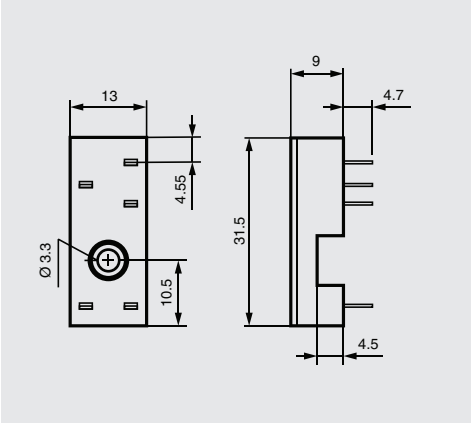

MH16-2

* In parenthesis is the height of the socket with plastic retainer clip. ** For lower profile application.

All accessories are sold separately.