THIS DRAWING IS UNPUBLISHED. RELEASED FOR PUBLICATION 2008
© COPYRIGHT 2008 BY - ALL RIGHTS RESERVED.

LOC	DIST
A1	-

REVISIONS

P	LTR	DESCRIPTION	DATE	DWN	APVD
	F3	925380-3 obsoleted	21AUG2013	Mah.	Krauss

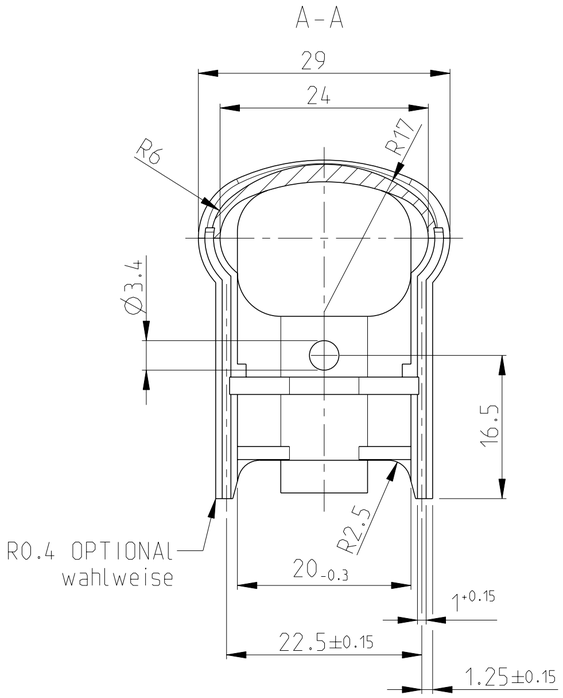

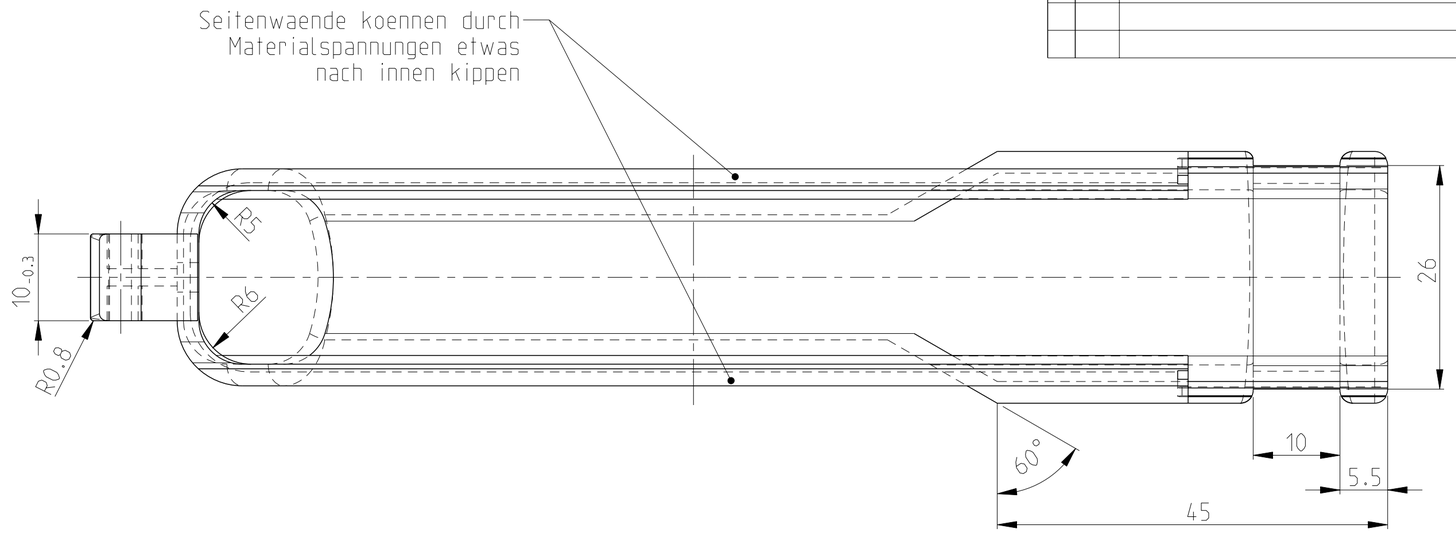

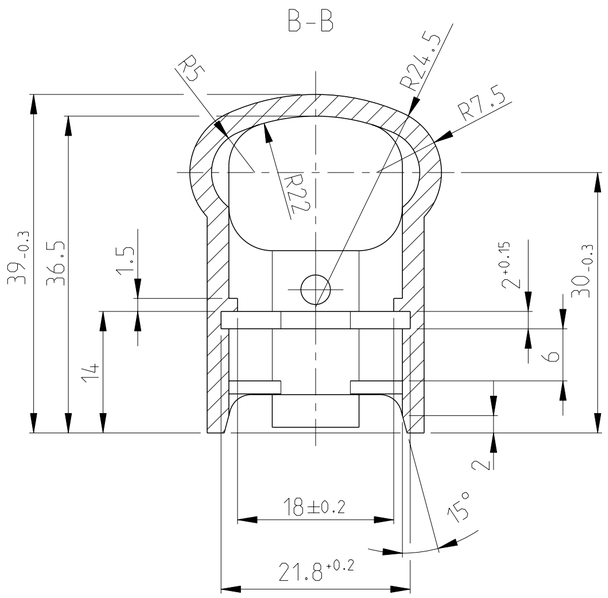

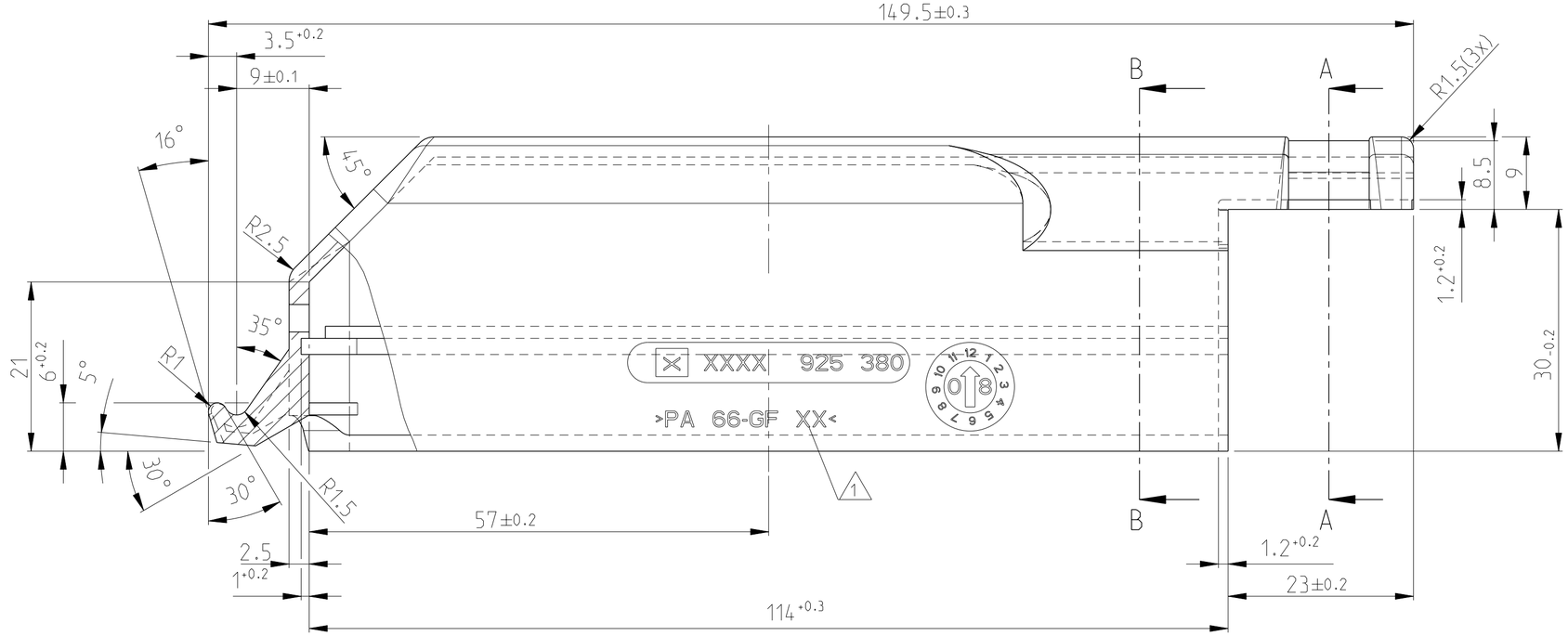

OBSOLETE	~~>PA 66-GF 13<~~	~~925380-3~~	~~F~~	~~PA 66 GV13~~	~~YELLOW~~
OBSOLETE	~~>PA 66-GF 35<~~	~~925380-2~~	~~F~~	~~POLYAMID 66 GV35 SEO~~	~~BLACK~~
	>PA 66-GF 13<	925380-1	F	POLYAMID 66 GV13	BLACK
	MATERIAL IDENTIFICATION ⚠	NUMBER	REV	MATERIAL	COLOUR

THIS DRAWING IS A CONTROLLED DOCUMENT.

DIMENSIONS: mm

TOLERANCES UNLESS OTHERWISE SPECIFIED:
0 PLC ±
1 PLC ±
2 PLC ±
3 PLC ±
4 PLC ±
ANGLES ±°

MATERIAL: SEE TABLE
FINISH: -

DWN	Haß	29APR1975
CHK	Stredak,F.	26NOV2008
APVD	Bleicher,M.	27NOV2008
PRODUCT SPEC	-	
APPLICATION SPEC	-	
WEIGHT	-	

TE Connectivity

NAME: CONNECTOR HOUSING
Griffkappe fuer 35pol. Buchsengehaeuse
-

SIZE	CAGE CODE	DRAWING NO	RESTRICTED TO
A2	00779	C-925380	-

Customer Drawing | SCALE 2:1 | SHEET 1 OF 1 | REV F3

1471-9 (3/11)
Pro/ENGINEER DRAWING