THIS DRAWING IS UNPUBLISHED. RELEASED FOR PUBLICATION -,- .
© COPYRIGHT - BY TYCO ELECTRONICS CORPORATION. ALL RIGHTS RESERVED.

LOC	DIST
AJ	00

REVISIONS

P	LTR	DESCRIPTION	DATE	DWN	APVD
	H	REVISED PER ECO 06-024121	1/29/2007	DW	JL

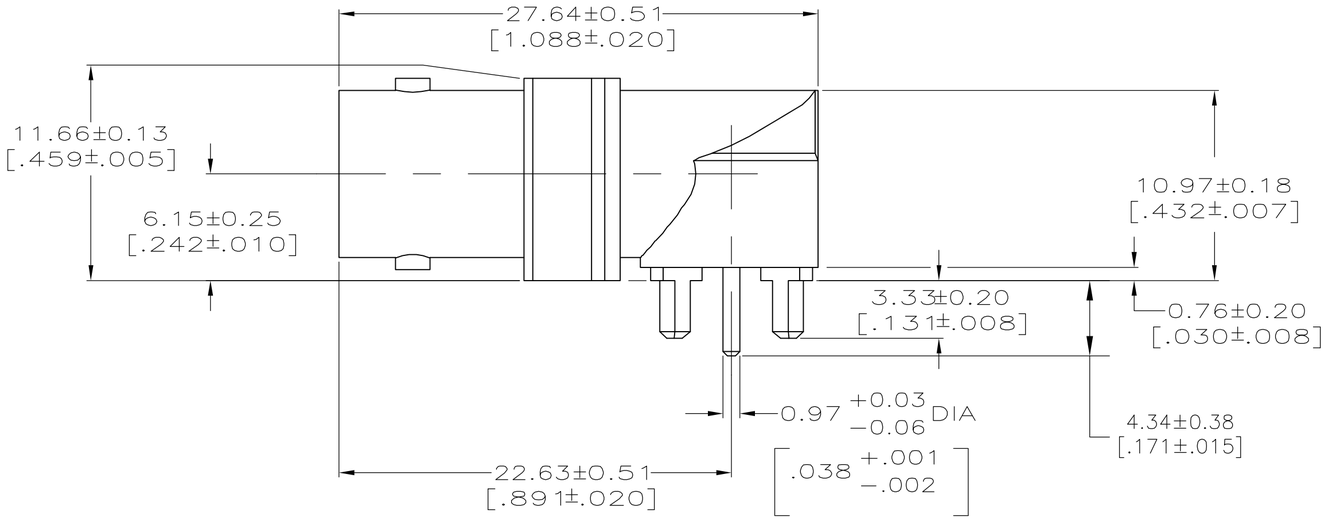

1. ZINC PER QQ-Z-363.
2. BERYLLIUM COPPER PER QQ-C-530.
3. PTFE PER MIL-P-19468.
4. TIN-LEAD PLATE PER ASTM B 545, 3.81 μm [.000150] MIN THICK.
5. GOLD PLATE PER MIL-G-45204, 0.76μm [.000030] MINIMUM THICK.
6. INTERFACE PER MIL-C-39012
7. MODIFIED MAJOR DIAMETER TO 12.29 [.484]

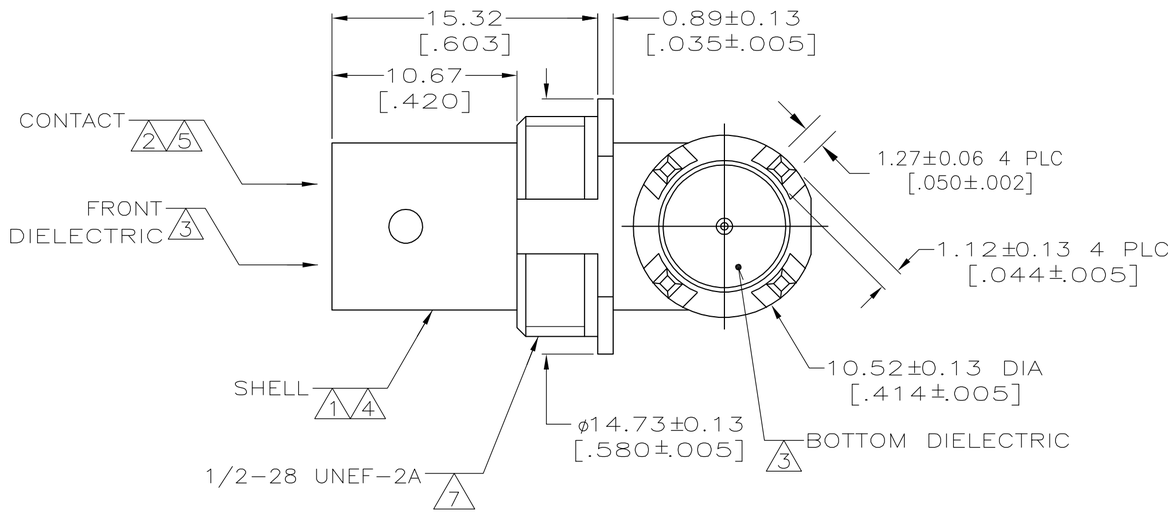

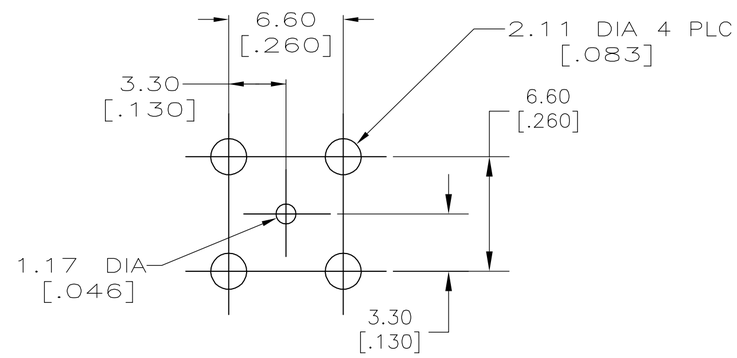

PCB CONFIGURATION

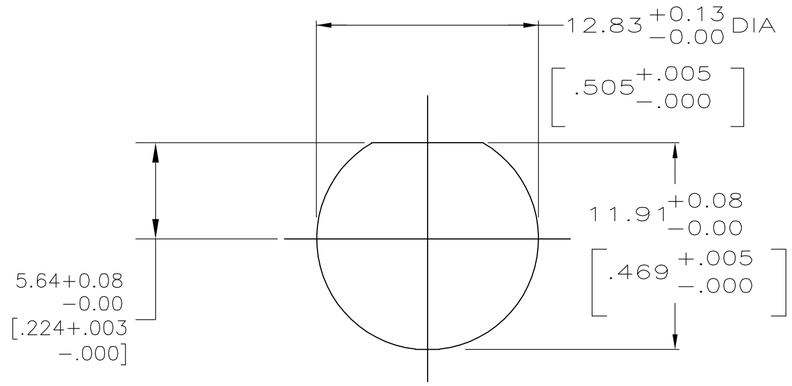

RECOMMENDED PANEL CUTOUT

SUPERSEDED BY 1274425-2	1274425-2
	1274425-1
	PART NUMBER

THIS DRAWING IS A CONTROLLED DOCUMENT.

DIMENSIONS: INCHES

TOLERANCES UNLESS OTHERWISE SPECIFIED:
0 PLC ± -
1 PLC ± -
2 PLC ± 0.08 [.003]
3 PLC ± -
4 PLC ± -
ANGLES ± -

MATERIAL: SEE NOTES 1 - 4

FINISH: SEE NOTES 5, 6

DWN J. LIPPERT 1-3-00
CHK J. LIPPERT 1-3-00
APVD J. LIPPPERT 1-3-00
PRODUCT SPEC —
APPLICATION SPEC —
WEIGHT —

tyco Electronics
Tyco Electronics Corporation
Harrisburg, PA 17105-3608

NAME: JACK, RIGHT ANGLE, 75 OHM, PCB, BNC

SIZE	CAGE CODE	DRAWING NO	RESTRICTED TO
A2	00779	C-1274425	—

CUSTOMER DRAWING | SCALE 4:1 | SHEET 1 OF 1 | REV H

1274425