ROHS COMPLIANT

PRODUCT DATA DRAWING

REVISION HISTORY			
REV	DESCRIPTION	DATE	APPROVED
D	DCN 41797	10/15	DAL

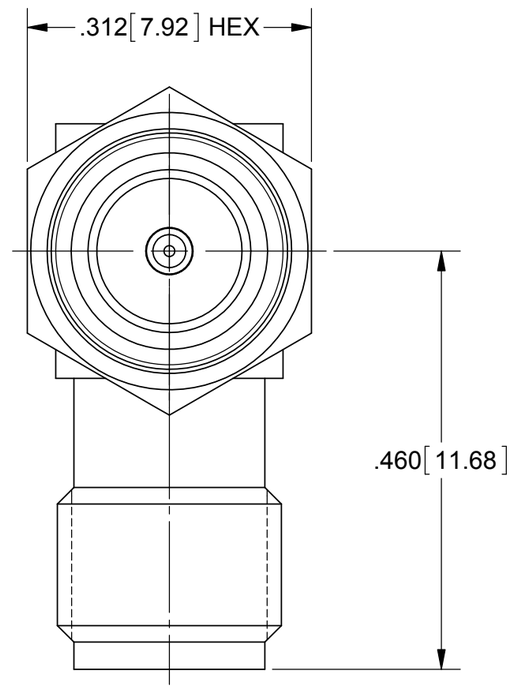

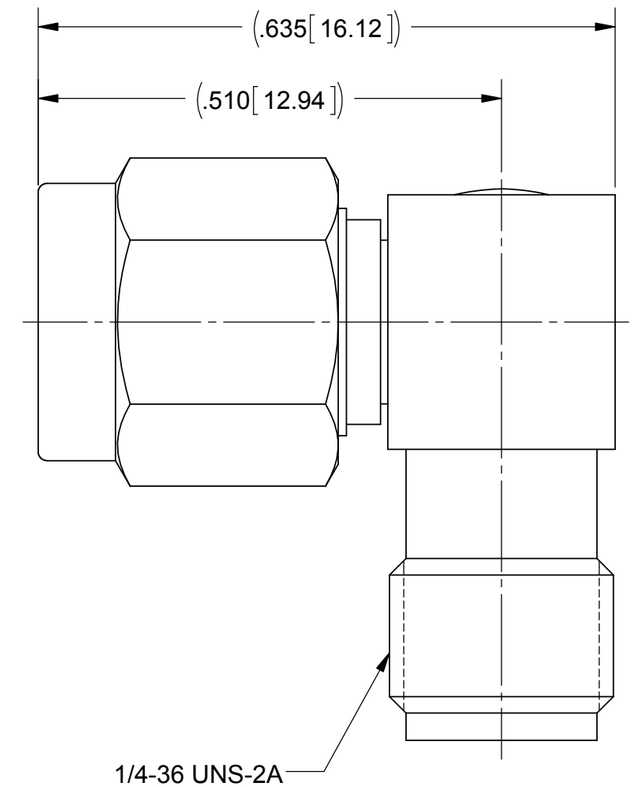

MATERIAL:

BODIES & COUPLING NUT:	STAINLESS STEEL PER AMS-5640, ALLOY UNS S30300, TYPE 1
CAP:	STAINLESS STEEL PER AMS A-240, ALLOY UNS S30400
LOCK RING & CONTACT (FEMALE):	BERYLLIUM COPPER PER ASTM B196, ALLOY No. UNS C17300, TD04
CONTACT (MALE):	BRASS PER ASTM B16, ALLOY UNS No. C36000
INSULATORS:	PTFE PER ASTM D1710, TYPE I, GRADE 1, CLASS
GASKET:	SILICONE RUBBER PER A-A-59588, CLASS 2B, GRADE 50/60

FINISH:

BODIES, CAP & COUPLING NUT:	GOLD PER ASTM B488, TYPE I, CODE C, CLASS .50, OVER NICKEL PER AMS-QQ-N-290, CLASS 1, .00005" MIN.
CONTACTS:	GOLD PER ASTM B488, TYPE II, CODE C, CLASS .76, OVER NICKEL PER AMS-QQ-N-290, CLASS 1, .00005" MIN.

PERFORMANCE:

IMPEDANCE:	50 OHMS
FREQ. RANGE:	DC TO 12.4 GHz

MATERIAL: SEE NOTES

FINISH: SEE NOTES

SURFACE AREA: N/A

PROPRIETARY

THE INFORMATION CONTAINED IN THIS DRAWING IS THE SOLE PROPERTY OF SV MICROWAVE, INC. ANY REPRODUCTION IN PART OR AS A WHOLE WITHOUT THE WRITTEN PERMISSION OF SV MICROWAVE, INC IS PROHIBITED.

DIMENSIONS ARE IN INCHES TOLERANCES:

FRACTIONAL: ±1/64 ANGULAR: X° ±1°0' X°X' ±15'

DECIMAL: .X ±.030 .XX ±.010 .XXX ±.005

INTERPRET DIMENSIONS AND TOLERANCES PER ASME Y14.5M - 1994

THIRD ANGLE PROJECTION

UNLESS OTHERWISE SPECIFIED

1) ALL DIMENSIONS ARE IN INCHES [MILLIMETERS]
2) ALL DIMENSIONS ARE AFTER PLATING.
3) BREAK CORNERS & EDGES .005 R. MAX.
4) CHAM. 1ST & LAST THREADS.
5) SURFACE ROUGHNESS 63₃MIL-STD-10.
6) DIA.'S ON COMMON CENTERS TO BE CONCENTRIC WITHIN .005 T.I.R.
7) REMOVE ALL BURRS

DRAWN:	BNK 10/29/15
CHECKED:	DAL 10/29/15
APPROVED:	DGG 11/02/76

Amphenol SV MICROWAVE
2400 Centrepark West Drive, Suite 100
West Palm Beach, FL 33409

TITLE: SMA JACK TO SMA PLUG R/A ADAPTER

SIZE	CAGE CODE	DWG. NO.
B	95077	2994-6001

SCALE: 6:1

SHEET 1 OF 1