THIS DRAWING IS UNPUBLISHED. RELEASED FOR PUBLICATION 1998
© COPYRIGHT 1998 BY TYCO ELECTRONICS CORPORATION. ALL RIGHTS RESERVED.

LOC	DIST
–	–

REVISIONS

P	LTR	DESCRIPTION	DATE	DWN	APVD
	A4	Released as per ECR-07-030422	17.12.07	SP	TS
	A5	**REVISED PER ECO-09-027197**	**12JAN10**	**KK**	**AEG**

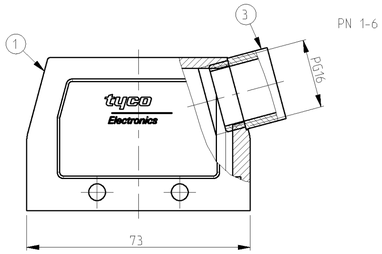

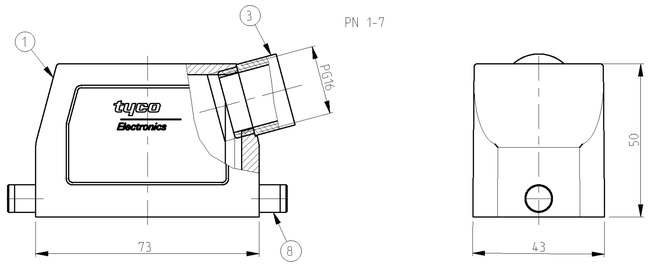

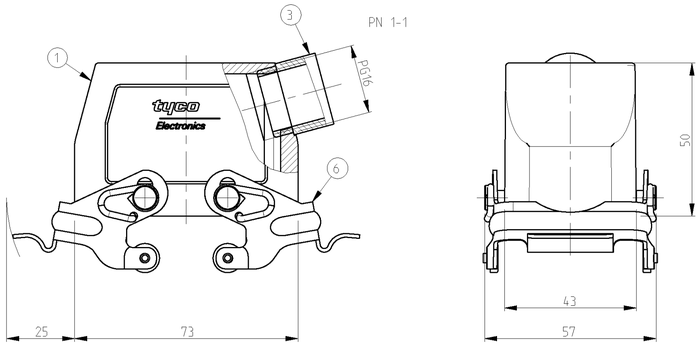

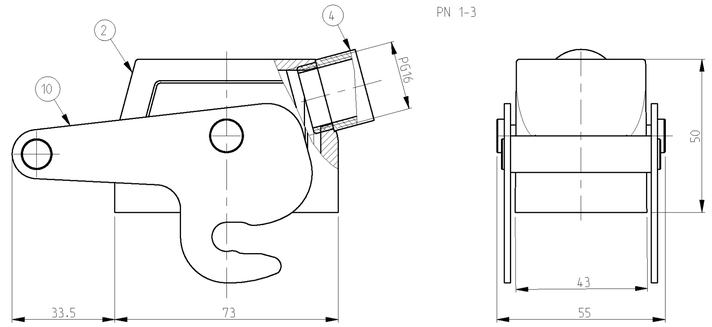

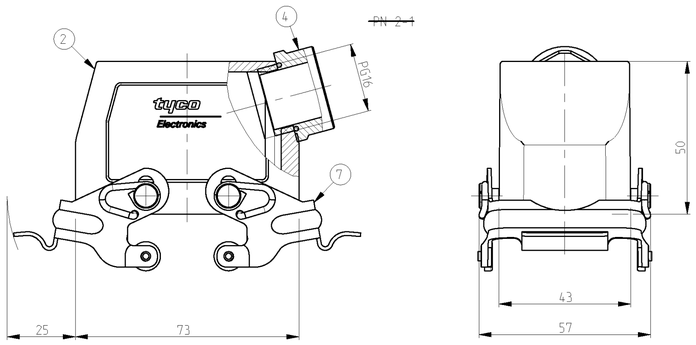

NOTES.

1 Material:Housing:Aluminium Diecasting Alloy

2 Surface:Varnish grey

3 Varnish on the inside not necessary

4 Packaging
Quantity 5 Pieces in a box

5 OBSOLETE PARTS: OBSOLETE CIS STREAMLINING PER D.RENAUD/D.SINISI

PN 1-7

SCALE 1:2

PN 1-3

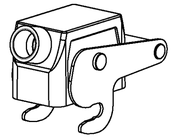

SCALE 1:2

PN 1-6

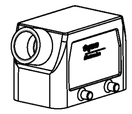

SCALE 1:2

PN 1-1

SCALE 1:2

~~PN 2-1~~

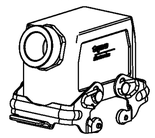

SCALE 1:2

OBSOLETE		OBSOLETE 5		OBSOLETE							
1							ZB-Central clip	Stainless steel	-		10
	2						LB-Clip bolt	Stainless steel	-		9
		2					LB-Clip bolt	Steel	Zinc plated	Blue	8
			2				VS-Side clip	Stainless steel	-		7
				2			VS-Side clip	Steel	Zinc plated	Blue	6
					4		VS-Clip bolt	Stainless steel	-		5
1							6-K1-Adaptor PG16	Brass	Nickel plated		4
		1		1		1	Adaptor round PG16	Brass	Nickel plated		3
1			1				Hood HB.10.Pg.1.16	Aluminium	Aluminiume oxide	Blak	2
		1		1		1	Hood HB.10.Pg.1.16	Aluminium	-	Grey	1
1-32-	71-	72-	11-	12-	61-	6	DESCRIPTION	MATERIAL	SURFACE	COLOR	ITEM NO	NOTES

ORDERING TEXT
HB.10.STS.1.16.Z
HB-K.10.Sts.1.16.Z
HB.10.STS-VS.1.16.Z
HB.K.10.STS.VS.1.16.Z
HB.10.STS-GR.1.16.Z
HB-K.10.Sts-GR.1.16.Z
HB-Z.10.STS-ZB.1.16.Z

THIS DRAWING IS A CONTROLLED DOCUMENT FOR TYCO ELECTRONICS CORPORATION. IT IS SUBJECT TO CHANGE AND THE CONTROLLING ENGINEERING ORGANIZATION SHOULD BE CONTACTED FOR THE LATEST REVISION.

DIMENSIONS: mm

TOLERANCES UNLESS OTHERWISE SPECIFIED: ASME Y14.5M-1994 ASME Y14.5-1982 ASCM 9001-00
0 PLC ±
1 PLC ±
2 PLC ±
3 PLC ±
4 PLC ±
ANGLES ±

MATERIAL –

FINISH –

DWN 03.03.99 Schneider
CHK 03.03.99 Schweiger
APVD –
PRODUCT SPEC –
APPLICATION SPEC –
WEIGHT –

Tyco Electronics
Tyco Electronics,AMP,GmbH
D-53819,Neunkirchen,Germany

NAME
Hood
HB.10.Sts.1.16.Z

SIZE	CAGE CODE	DRAWING NO	RESTRICTED TO
A	00779	C-1102260	

CUSTOMER DRAWING | SCALE 1:1 | SHEET 1 OF 1 | REV A5