THIS DRAWING IS UNPUBLISHED. RELEASED FOR PUBLICATION 03-APRIL-01
© COPYRIGHT 2001 BY TYCO ELECTRONICS CORPORATION. ALL RIGHTS RESERVED.

LOC	DIST
GT	00

REVISIONS

F	LTR	DESCRIPTION	DATE	DWN	APVD
	B1	EV00-0002-03	04DEC2003	MK	RVI
	B2	EV00-0051-03	12DEC2003	MK	RVI
	B3	EV00-0035-04	12JAN2004	PS	RVI
	B4	ECR-05-010161	01SEP2005	PH	RVI

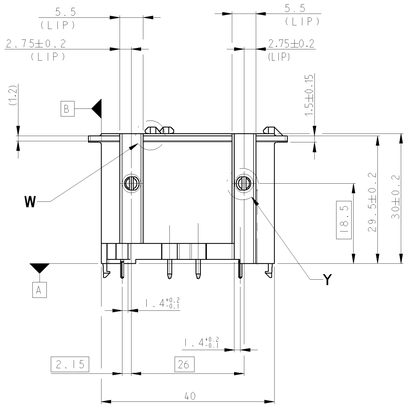

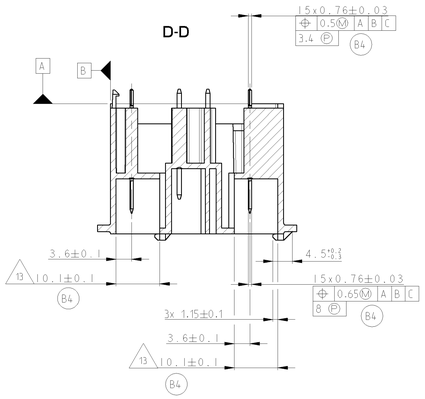

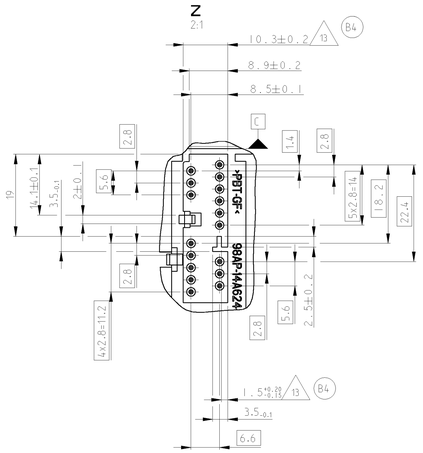

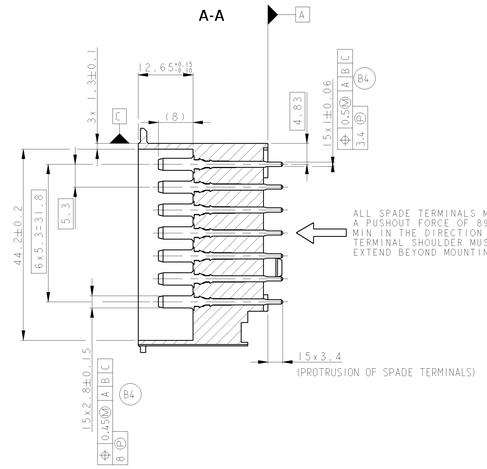

1. SURFACE TOLERANCE ALL OVER 0.6 A B C
2. MATERIAL:
   POLYBUTYLENE TEREPHTHALATE 33% GLASS FILLED PER WSK-M4D608-A.
3. CHANGES AFFECTING DESIGN, COMPOSITION OR PROCESSING OF THE PART PREVIOUSLY APPROVED FOR PRODUCTION, REQUIRE PRIOR APPROVAL FROM FORD PRODUCT DEVELOPMENT REF.QS9000.
4. PART MUST BE FREE FROM BURRS AND SHARP EDGES.
5. 0.3 MAX RAD PERMISSIBLE ON EDGES AND FILLETS SHOWN SHARP
6. WALL THICKNESS 1.35
7. EEO ENGINEERING APPROVAL OF PRODUCTION SAMPLES FROM EACH SUPPLIER IS REQUIRED PRIOR TO AUTHORISATION OF INITIAL PRODUCTION.
8. PLASTIC PARTS MATERIAL IDENTIFICATION SYMBOL TO BE LOCATED AS SHOWN. SIZE TO SUIT MANUFACTURER BUT MUST BE CLEARLY VISIBLE.
9. SOURCE IDENTIFICATION AS ESTABLISHED BY SUPPLY OPERATIONS, FORD TRADEMARK NO. 2 AND PART NO. TO APPEAR IN A VISIBLE LOCATION.
10. NOT TO BE ISSUED OUTSIDE FMC LTD/FORD WERKE AG OR USED FOR MANUFACTURING PURPOSES WITHOUT THE APPROVAL OF EEO.
11. UNDIMENSIONED FEATURES AT SUPPLIERS DESCRETION. ANY CHANGES MUST BE APPROVED BY FORD ENGINEERING PRIOR TO CHANGE.
12. PARTIAL BASES INSURED BY MEASUREMENT PREPARATION No.190 119136.01

(B4) 13 MEASURED 1 mm ABOVE THE CAVITY BOTTOM

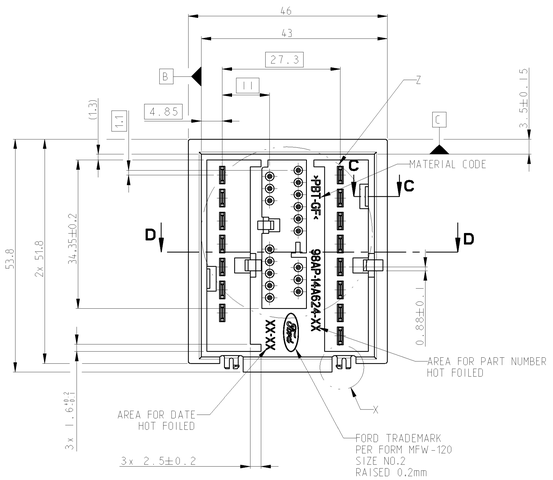

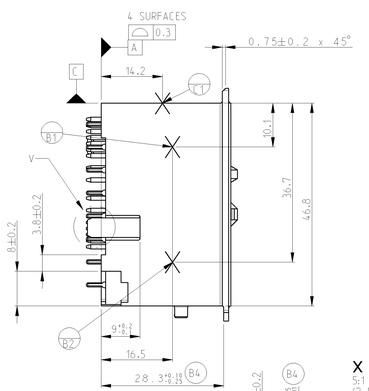

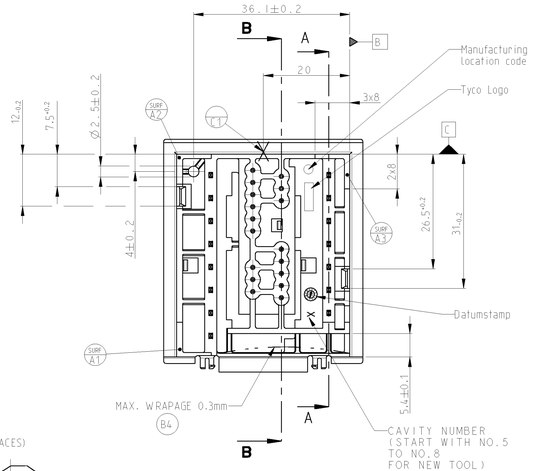

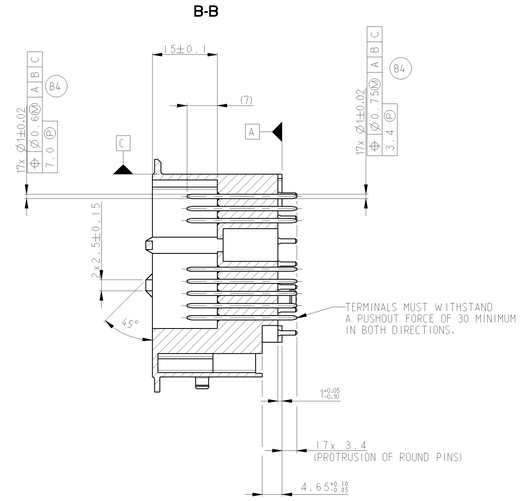

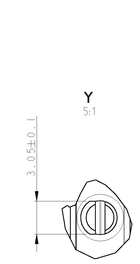

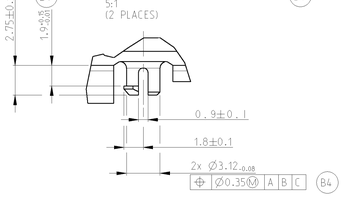

RECOMMENDED P.C. BOARD LAYOUT

for PN 1-1437711-6 (11 PIN VERSION - WAVE SOLDER SIDE SHOWN)

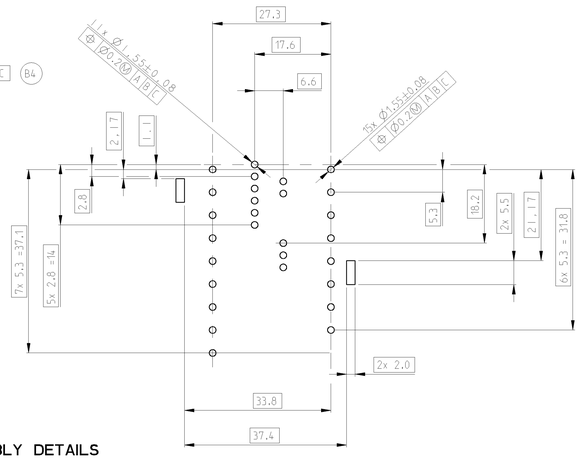

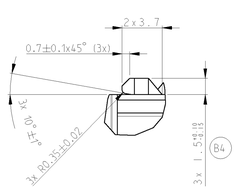

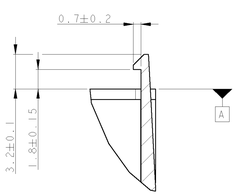

KEY TO PIN LAYOUT

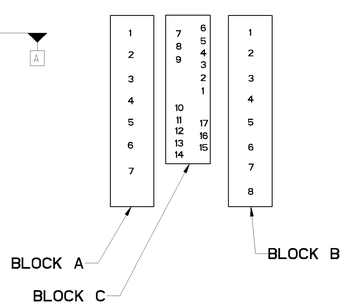

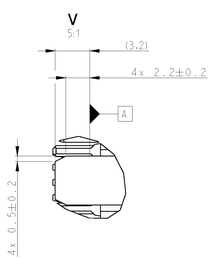

ISOMETRIC VIEWS

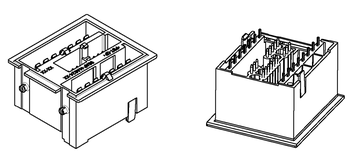

SCALE 1:1:1 SCALE 1:1

ASSEMBLY DETAILS

TYCO PART NUMBER	ASSEMBLY CUSTOMER PART NUMBER	TYPE	ASSEMBLY T&B PART NUMBER	COLOUR OF MOULDING	PINS FITTED (SHOWN X) F6RF-14421-A(-)(BLOCK A) 1	2	3	4	5	6	7	8	98AP-14461-BA (BLOCK C) 1	2	3	4	5	6	7	8	9	10	11	12	13	14	15	16	17	F6RF-14421-A(-) (BLOCK B) 1	2	3	4	5	6	7	8
1-1437711-7	98AP-144624-AE	4000N	2400256-003	BLUE	X	X	X	X	X	X	X				X	X	X					X	X	X	X					X	X	X	X	X	X	X	X
1-1437711-6	98AP-144624-BD	5000N/6000N	2400256-002	BLACK	X	X	X	X	X	X	X		X	X	X	X	X	X		X	X	X	X	X						X	X	X	X	X	X	X	X
1-1437711-5	98AP-144624-CC	9000N	2400256-001	GREY	X	X	X	X	X	X	X		X	X	X	X	X	X	X	X	X	X	X	X	X	X	X	X	X	X	X	X	X	X	X	X	X

"IT IS OFFENSIVE TO CONTRACT LAW TO REPRODUCE THIS DOCUMENT OR DISCLOSE THE CONTENTS OR USE THE EQUIPMENT OR COMPONENTS DESCRIBED THEREIN FOR ANY PURPOSE WHATSOEVER WITHOUT OUR PERMISSION."

DRN	D.R.TERRY	03APR2001
CHD	S.KINGSWELL	03APR2001
APPD	E.HANAK	03APR2001

DIMENSIONS: mm

TOLERANCES UNLESS OTHERWISE SPECIFIED: DIMENSIONS ±0.3; 0 PLC ±-; 1 PLC ±-; 2 PLC ±-; 3 PLC ±-; 4 PLC ±-; ANGLES ±0°

MATERIAL SEE LIST; FINISH SEE TABLE

PRODUCT SPEC -; -; -

APPLICATION SPEC -

WEIGHT -

CUSTOMER DRAWING

Tyco Electronics

Tyco Electronics UK Ltd. Stanmore, Middlesex, HA7 4RS.

NAME: RADIO HEADER ASSEMBLIES

SIZE	CAGE CODE	DRAWING NO	RESTRICTED TO
A0	00779	C-1-1437711-5	-

SCALE 2:1 SHEET 1 OF 1 REV B4