THIS DRAWING IS UNPUBLISHED. RELEASED FOR PUBLICATION 20
© COPYRIGHT 20 BY - ALL RIGHTS RESERVED.

REVISIONS

P	LTR	DESCRIPTION	DATE	DWN	APVD
	A	INITIAL	28MAR2016	DW	CW
	A1	ECR-18-017710	14NOV2018	CD	CW

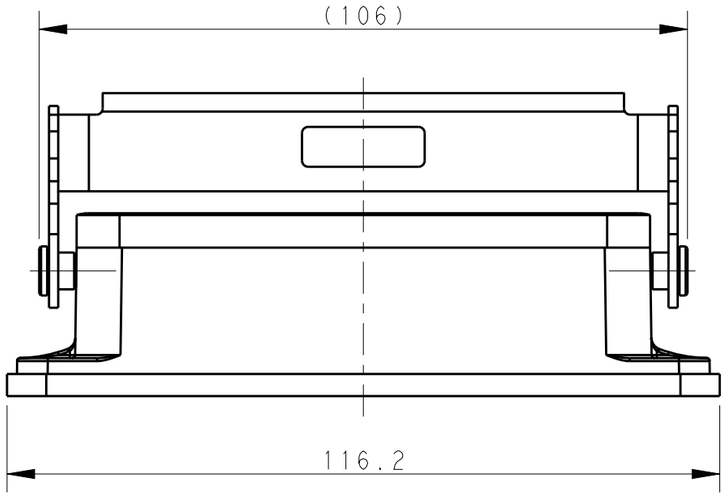

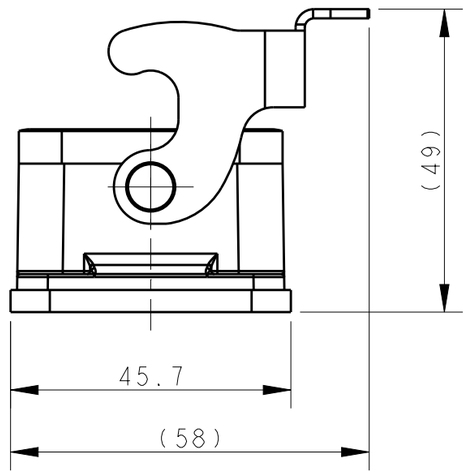

NOTES:
1. TECHNICAL CHARACTERISTICS:
   HOUSING MATERIAL: DIE CAST ALUMINIUM ALLOY
   SURFACE: SEE TABLE
   DEGREE OF PROTECTION: IP65 (MATED)

注释：
1. 技术参数：
   下壳材料： 铝合金
   表面处理： 见表格
   防护等级： IP65(配合)

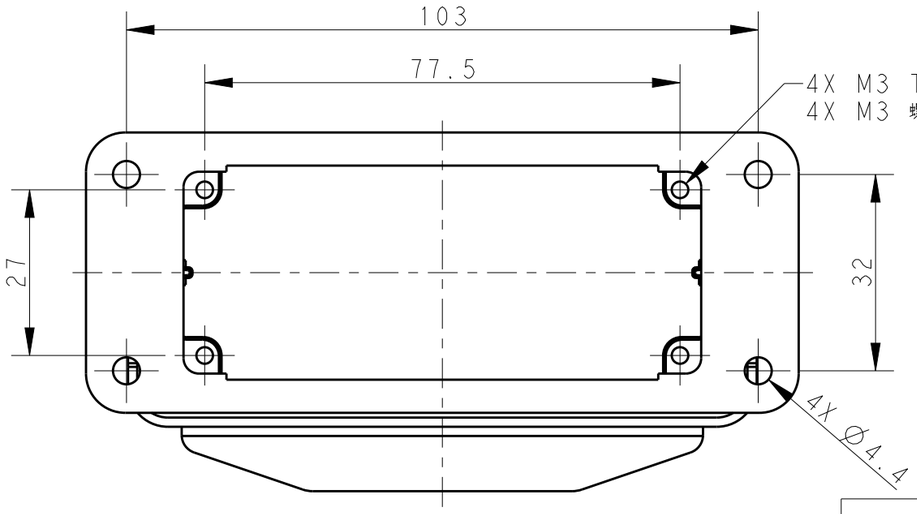

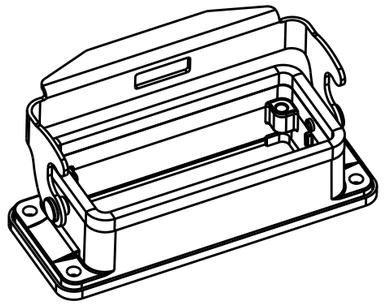

SCALE 1:2

PANEL CUT OUT

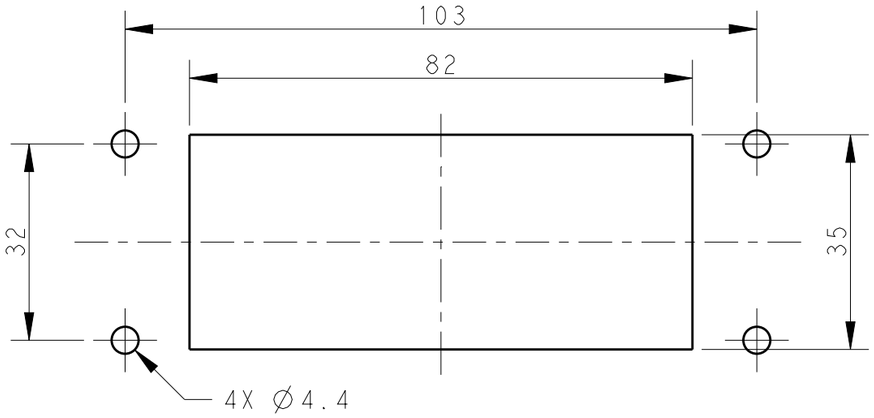

PART NUMBER 零件料号		PART DESCRIPTION 零件描述
T1500162000-001	H16B-AGS-LB	H16B HOUSING,BULKHEAD MOUNTED,STAINLESS STEEL SINGLE LOCKING POWDER COATED,DEEP GREY H16B下壳，开孔安装，不锈钢单扣，深灰色粉末喷涂
T1500162000-000	H16B-AGS-LB	H16B HOUSING,BULKHEAD MOUNTED,STAINLESS STEEL SINGLE LOCKING POWDER COATED,GREY H16B下壳，开孔安装，不锈钢单扣，灰色粉末喷涂

THIS DRAWING IS A CONTROLLED DOCUMENT.

DIMENSIONS: mm

TOLERANCES UNLESS OTHERWISE SPECIFIED:
0 PLC ±-
1 PLC ±-
2 PLC ±-
3 PLC ±-
4 PLC ±-
ANGLES ±-

MATERIAL - -
FINISH - -

DWN DAVID WANG 28MAR2016
CHK CHRIS WANG 28MAR2016
APVD XIANG XU 28MAR2016
PRODUCT SPEC 108-137013
APPLICATION SPEC 114-137013
WEIGHT -

TE Connectivity

NAME H16B-AGS-LB

SIZE	CAGE CODE	DRAWING NO	RESTRICTED TO
A3	00779	C-T1500162000000	-

Customer Drawing

SCALE 1:1 SHEET 1 OF 1 REV A1

1470-19 (3/13)