THIS DRAWING IS UNPUBLISHED. RELEASED FOR PUBLICATION 20
© COPYRIGHT 20 BY - ALL RIGHTS RESERVED.

REVISIONS

P	LTR	DESCRIPTION	DATE	DWN	APVD
	A	INITIAL RELEASE	13JUN2015	GY	CW
	A1	ECR-16-010736	26JUL2016	CH	CW

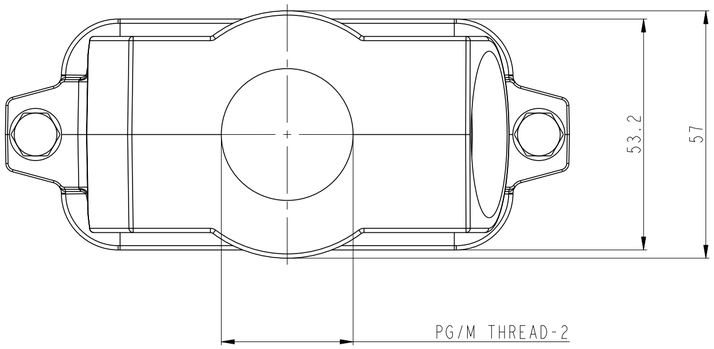

NOTES:
1. TECHNICAL CHARACTERISTICS:
   HOOD MATERIAL: DIE CAST ALUMINIUM ALLOY
   SURFACE TREATMENT: SEE TABLE
   DEGREE OF PROTECTION: IP68 (MATED)

注释
1.技术参数:
壳体材料: 铝合金
表面处理: 见表格
防护等级: IP68 (配合)

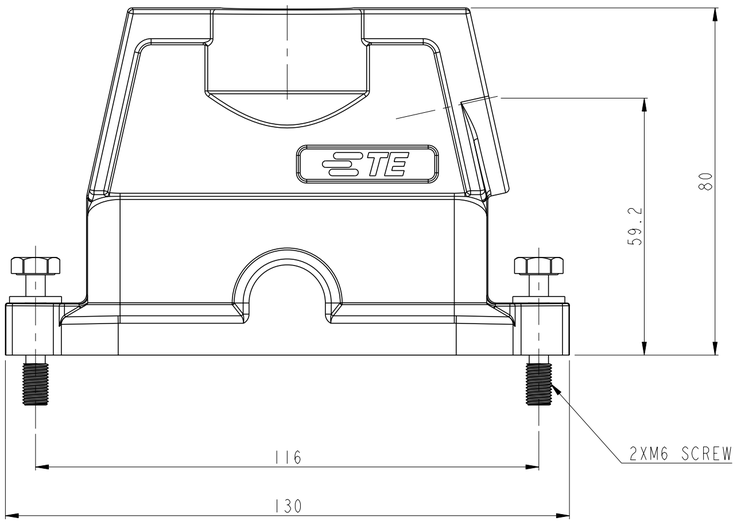

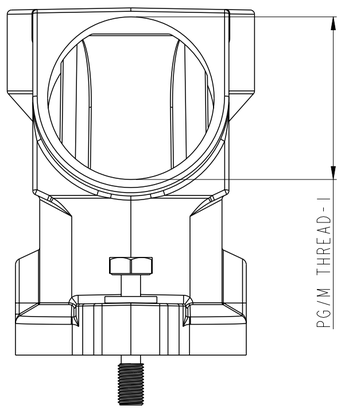

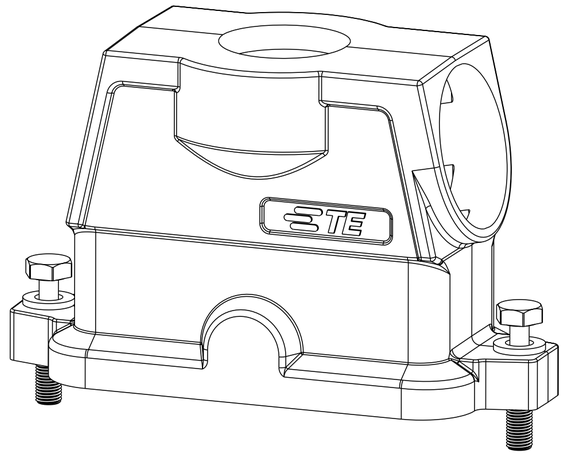

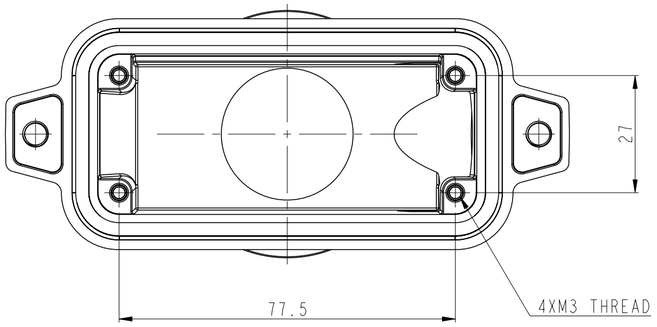

PART NUMBER 料号	PART DESCRIPTION 描述		PG/M THREAD-2 PG/M 螺纹孔-2	PG/M THREAD-1 PG/M 螺纹孔-1
T1902164020-000	H16BPR-TG/SHC-M20/M40	H16BPR HOOD, CENCER LOCKING, TOP ENTRY WITH M20, SIDE ENTRY WITH M40, PODWER COATED, SILVER WHITE H16BPR中部锁定顶出M20侧出M40上壳,银白色粉末喷涂	M20	M40
T1902164025-000	H16BPR-TG/SHC-M40/M25	H16BPR HOOD, CENCER LOCKING, TOP ENTRY WITH M40, SIDE ENTRY WITH M25, PODWER COATED, SILVER WHITE H16BPR中部锁定顶出M40侧出M25上壳,银白色粉末喷涂	M40	M25
T1902163240-000	H16BPR-TG/SHC-M32/M40	H16BPR HOOD, CENCER LOCKING, TOP ENTRY WITH M32, SIDE ENTRY WITH M40, PODWER COATED, SILVER WHITE H16BPR中部锁定顶出M32侧出M40上壳,银白色粉末喷涂	M32	M40

THIS DRAWING IS A CONTROLLED DOCUMENT.

DIMENSIONS: mm

TOLERANCES UNLESS OTHERWISE SPECIFIED:
0 PLC ±-
1 PLC ±-
2 PLC ±-
3 PLC ±-
4 PLC ±-
ANGLES ±-

MATERIAL - -
FINISH - -

DWN GINO.YAO 13JUN2015
CHK CHRIS.WANG 13JUN2015
APVD XIANG.XU 13JUN2015
PRODUCT SPEC 108-137014
APPLICATION SPEC 114-137014
WEIGHT -

TE Connectivity

NAME H16BPR-TG/SHC-PG/M

SIZE	CAGE CODE	DRAWING NO	RESTRICTED TO
A2	-	C-T190216XXXXX00	-

Customer Drawing | SCALE 1:1 | SHEET 1 OF 1 | REV A1

1471-9 (3/13)