THIS DRAWING IS UNPUBLISHED. RELEASED FOR PUBLICATION 2006
© COPYRIGHT 2006 BY TYCO ELECTRONICS CORPORATION. ALL RIGHTS RESERVED.

LOC	DIST
A1	-

REVISIONS

P	LTR	DESCRIPTION	DATE	DWN	APVD
	A2	ECR-09-013545	12MAY2009	SR	AR

NOTES

1 PART SHALL BE FREE AND CLEAN OF BURRS AND OTHER FOREIGN MATERIAL

2 PACKAGING: QUANTITY 3 PIECES

3 VARNISHING INSIDE HOUSING NOT REQUIRED

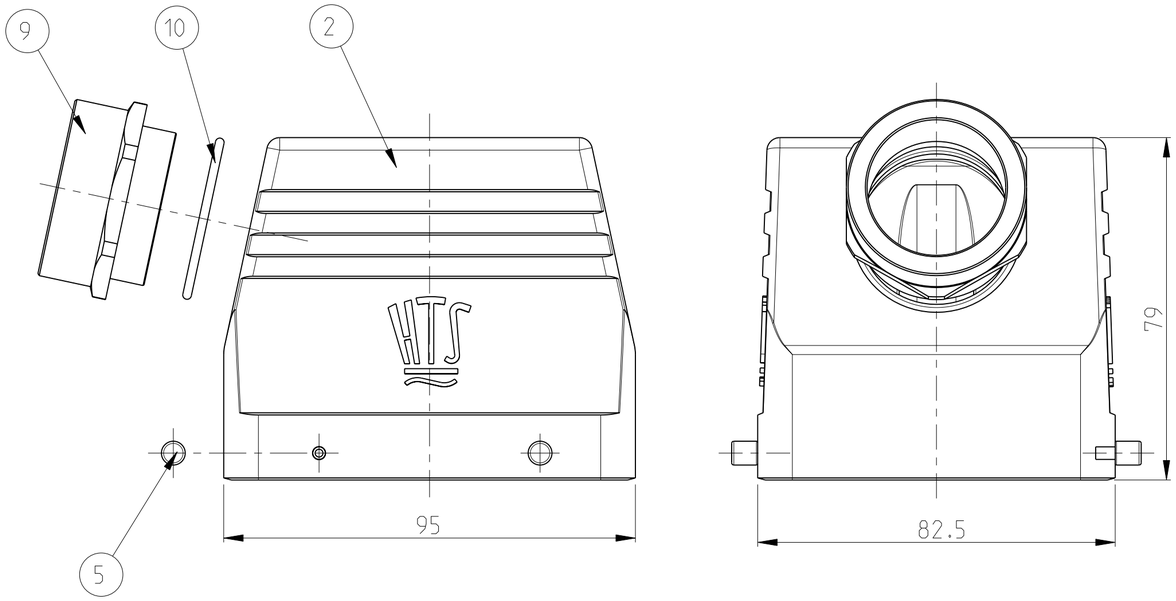

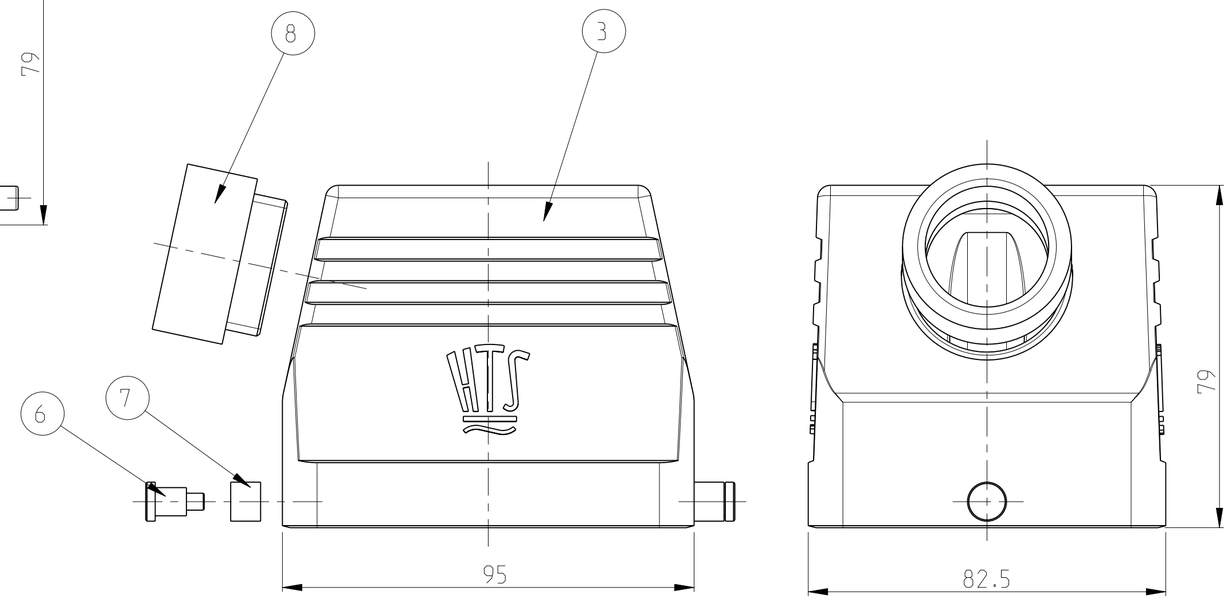

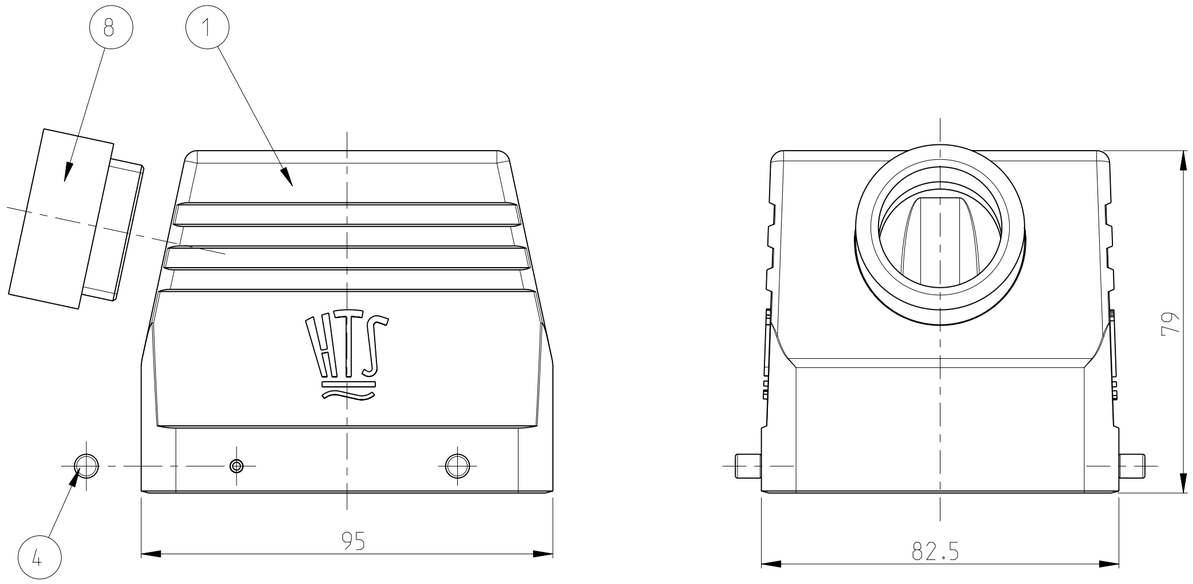

1-7	2-6	1-6	DESCRIPTION	MATERIAL	SURFACE	COLORE	ITEM	NOTES
	1		O-RING	NEOPRENE		BLACK	10	PG29
	1		ADAPTOR	BRASS	NICKEL PLATED	BLUE	9	PG29
1		1	ADAPTOR ROUND	BRASS	NICKEL PLATED	BLUE	8	PG29
2			SLIDE SPOOL	STEEL	ZINC PLATED	BLUE	7	
2			CLIP BOLT	STEEL	ZINC PLATED	BLUE	6	
	4		CLIP BOLT	STAINLESS STEEL	BLANC		5	
		4	CLIP BOLT	STEEL	ZINC PLATED	BLUE	4	
1			HOOD	ALUMINIUM		GREY	3	
	1		HOOD	ALUMINIUM	ALUMINIUM OXID	BLACK	2	
		1	HOOD	ALUMINIUM		GREY	1	

HB.32.STS.1.29.Z

HB-K.32.STS.1.29.Z

HB.32.STS-GR.1.29.Z

THIS DRAWING IS A CONTROLLED DOCUMENT FOR TYCO ELECTRONICS CORPORATION. IT IS SUBJECT TO CHANGE AND THE CONTROLLING ENGINEERING ORGANIZATION SHOULD BE CONTACTED FOR THE LATEST REVISION.

DIMENSIONS: mm

TOLERANCES UNLESS OTHERWISE SPECIFIED:
0 PLC ±-
1 PLC ±-
2 PLC ±-
3 PLC ±-
4 PLC ±-
ANGLES ±1°

MATERIAL -

FINISH -

DWN R.SCHNEIDER 12MAY2009
CHK T.SCHNURPFEIL 12MAY2009
APVD -
PRODUCT SPEC -
APPLICATION SPEC -
WEIGHT -

Tyco Electronics
tyco Electronics AMP GmbH
53757 Sankt Augustin (Germany)

NAME HOOD HB.32.STS.1.29.Z -

SIZE	CAGE CODE	DRAWING NO	RESTRICTED TO
A2	00779	C-1102347	-

CUSTOMER DRAWING | SCALE 1:1 | SHEET 1 OF 1 | REV A2

AMP 1471-9 REV 31MAR2000

Pro/ENGINEER DRAWING