SIGN	DATE	DESCRIPTION	APPROVER
⚠			

THIS IS CAD DRAWING, DO NOT REVISE MANUALLY!!!

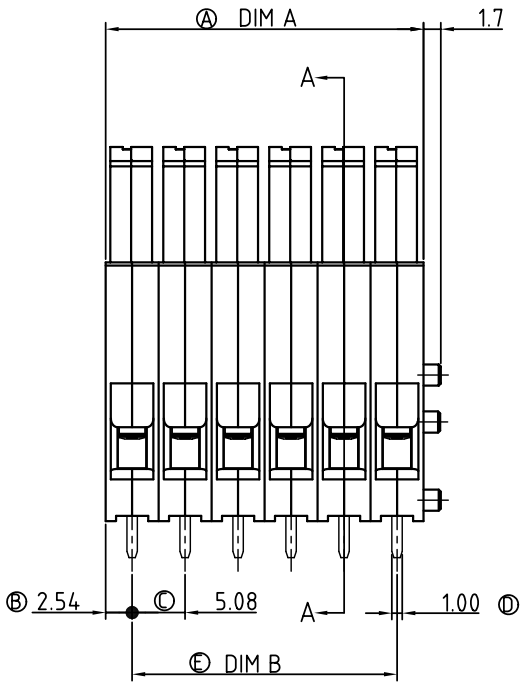

P.C.B LAYOUT

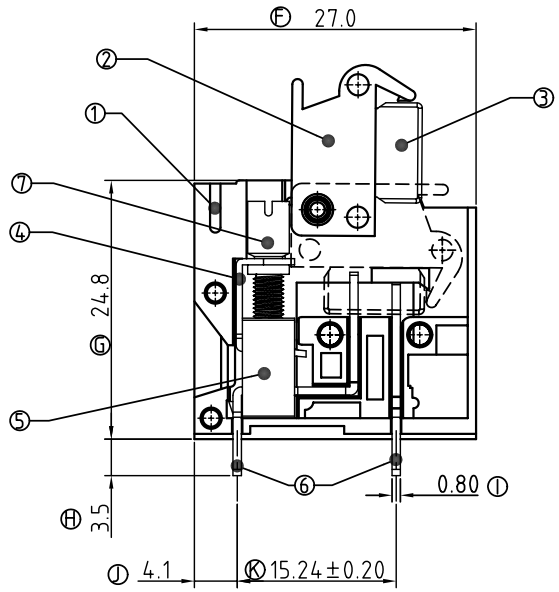

SECTION A--A

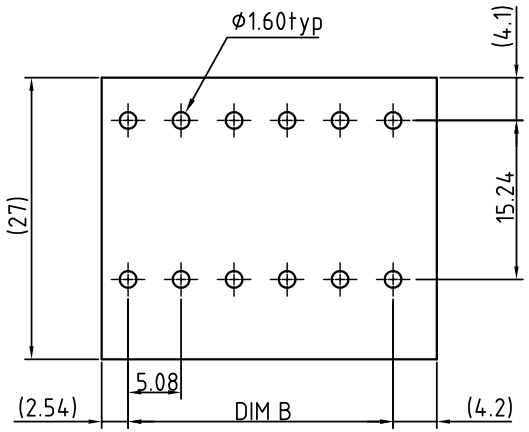

Dimension

DIM A	N×5.08
DIM B	(N-1)×5.08

N=Number of poles

POLES	TOL
1p-6p	±0.40
7p-12p	±0.60

Material:

- Item 1 Terminal (housing) : Thermoplastic (UL 94V-0)
- Item 2 Terminal (lever): Thermoplastic (UL 94V-0)
- Item 3 Condom: Brass ,Ni plated
- Item 4 Wire guard : Brass ,Ni plated
- Item 5 Clamp : Brass ,Ni plated
- Item 6 Wire guard solder pin : Brass ,Tin plated
- Item 7 Terminal screw : Steel Zinc plating"-"slot type

Electrical:

- Voltage rating : 300V
- Current rating : 15A
- Wire range :
- Solid wire (AWG) : 12-28
- Stranded wire(AWG) :12-28
- Torque(Lb-In) : 3.5
- Screw : M3
- Wire strip length :8~9mm
- Withstanding Voltage : 1.6KV
- Operating temperature : -40°C+115°C
- Soldering temperature : 250°C+10°C/5 Sec

VT xx 21 x 0 xxxx G

- xx: 01 1 CONTACTS; 02 2 CONTACTS; ... ...; 12 12 CONTACTS
- x: 0 Black; 5 Green (RAL6018/T); 6 Blue (RAL7035/D); 8 Grey
- xxxx: 0000:"@"Logo (Standard); 000A:"ANYTEK"Logo; Any special item by customer request, please contact sales department.
- G: Pb < 40,000ppm (RoHS)

ANYTEK

CUSTOMER COPY

ALL RIGHTS RESERVED. REPRODUCTION OR ISSUE TO THIRD PARTIES IN ANY FORM WHATEVER IS NOT PERMITTED WITHOUT WRITTEN AUTHORITY FROM THE PROPRIETOR. PROPERTY OF ANYTEK TECHNOLOGY CO., LTD

TITLE	VT 5.08 Series 1P-12P				
PART NO.	VTxx21x0xxxxG			DWG NO.	8VT0001
APPROVED	CHECKED	DESIGNED	DRAWN	CUST NO.	
		Aaron 2009.11.04	Aaron 2009.11.04	SHEET: 01/01	UNIT: mm; SCALE: NONE; REV.: B

Tolerance	
X.	±0.50
X.X	±0.30
X.XX	±0.10
X°	±1°