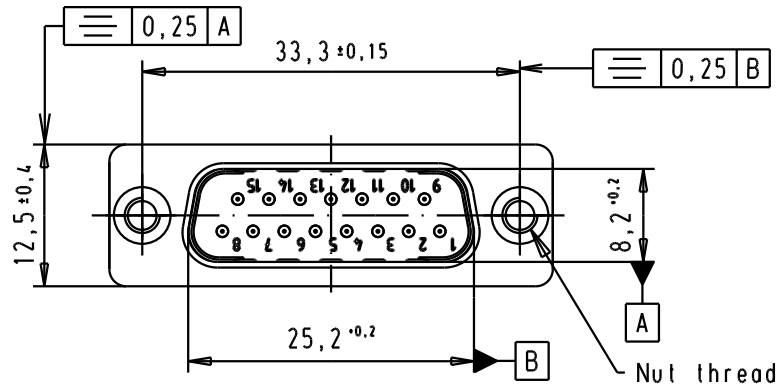

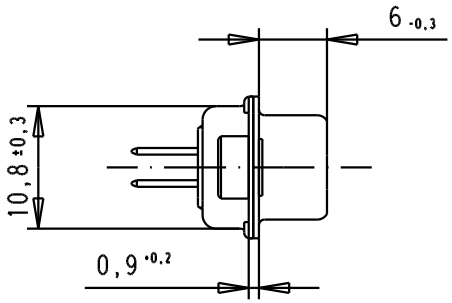

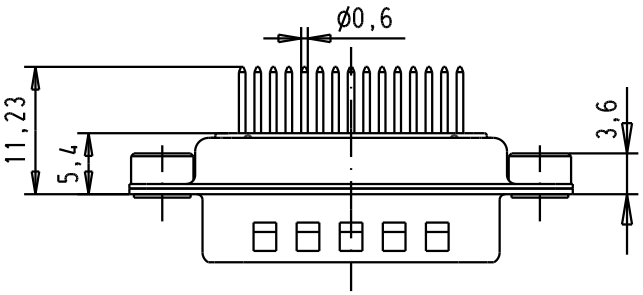

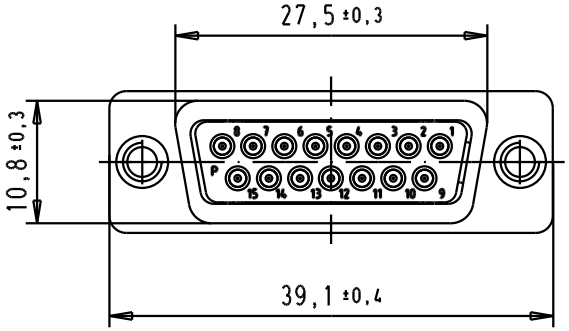

PCB Layout
Component side

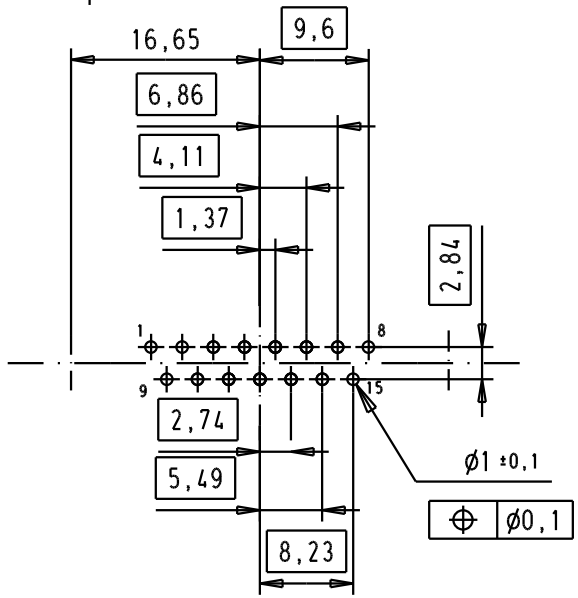

SPECIFICATION

Mating Cycles	500
Filter type	C
Capacitance	3900pf ±20%
Working Voltage	100v
Current Rating	7.5A
Insulation Resistance	>1GΩ

FREQUENCY (MHz)	ATTENUATION (dB)
5	6dB
10	11dB
50	25dB
100	35dB
500	35dB
1000	32dB

Part number	Nut thread		Mod.	Dat.	Name
09642227248	M3		33267	17/11/05	JMDR
09642227247	UNC 4-40		31058	8-JUL-02	CV

	Dat.	Name
Detail.	8-JUL-02	CV
Insp.		
Stand.		

All Dim. in mm
Orig. Size DIN A 4

D-Sub, male, straight, 15 Poles, turned solder pins, tin plated shell with dimples and clinch nuts

Ma?Mstab/ Scale 1.5:1

HARTING EURL
F-95972 Paris

TB 0964222724x

Sub.

Blatt/ Page 3/3