LAMBDA	PART NO:	ARA00499
	DRAWING NO:	ARA00499
	PAGE:	1 OF 2

SPECIFICATION/SOURCE CONTROL DOCUMENT

DESCRIPTION: **CHOKE EMI**

N SPECIFICATION CONTROL	Y SOURCE CONTROL	CERTIFICATION OF CONFORMANCE REQUIRED: ____

N SAFETY AGENCY CONTROL	UL____	CSA____	VDE/TUV___	RoHS __Y__

	MANUFACTURER	MANUFACTURER PART NUMBER
FIRST:	**DENSEI-LAMBDA**	**A21004B**
SECOND:		
THIRD:		

UNIT OF MEASURE: **EACH** PACKAGING: **TRAY**

REV	DATE	ECO	ENG	ENG	SFTY	Q.A.	DESCRIPTION
P1	10/16/07						NPR 1726

ENGINEERING NOTES:

LAMBDA CONFIDENTIAL

RoHS COMPLIANCE

MODEL : MVC650

1. TITLE : CHOKE COIL SPEC △(A21004B)

2. OUTLINE & DIMENSIONS

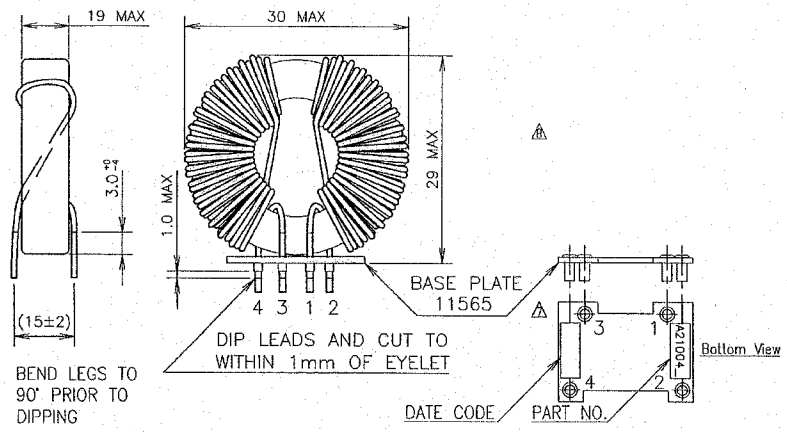

3. PARTS LIST

	PARTS LIST	CATALOG No.	MANUFACTURE	REMARKS
1	CORE	TL25/15/10-3E6	PHILIPS	
		SUB H25x15x10 (R12K)	DMECC	
		△ SUB		
		△ SUB		
2	BASE PLATE	11565	COUTANT	
		SUB		
		SUB		
3	WINDING WIRE	TIW 3S-ETFE	TOTOKU	ø1.0
		SUB		
		SUB		

4. SPECIFICATIONS

1. CONNECTIONS

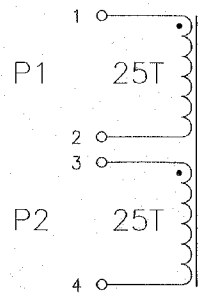

2. WINDING SPECIFICATIONS

SECTION	CONNECTION	WINDING DIA.	NET	TURNS	REMARKS
1	1 → 2	TIW ø1.0	1	25	P1
2	3 → 4	TIW ø1.0	1	25	P2
	→				
	→				
	→				
	→				

△

3	WITHSTAND VOLTAGE	COIL(P1)-COIL(P2)△	AC3000V, 3sec or AC3000V, 1min
4	INSULATION RESISTANCE	P - S	
5	INDUCTANCE	f=1kHz	6325uH±2000uH (1-4)
6	TEMPERATURE RATING		CLASS F
7	APPLICABLE SAFETY STANDARDS		UL, CSA, EN
8	INSULATION SYSTEM		

5. CONSTRUCTION

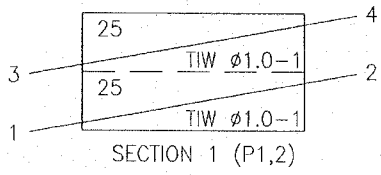

SECTION 1 (P1,2)

6. INSTRUCTIONS

	ITEM	CONTENTS
1	MARKING	STAMP
2	FIXING MATERIAL	NO
3	CUT PIN	NO
4	SPRING	NO
5	IMPREGNATION	NO
6	SOLDER	LEAD FREE NECESSARY (Sn-3.0Ag-0.5Cu)

△ NOTE

RoHS Complianace :
Refer to D-L Group Green Procurement Guideline : DL-EMS-010_

D	REV	CONTENTS	DATE	ENGR	CHK	APPD
C	E9	△ DELETE Top view △ CHANGE POSITION : PART NO. & DATE CODE	20 Jul. '07	A. Haga	[illegible]	H. TANEHIRA
B	B1	△ ADD COMMENT △ ADD NOTE △ DELETE CORE : 42502-TC-W △ DELETE CORE : T25X15X10-H3 △ A21004A => A21004B	24/May/'05	Moriyama	Motohashi	Haga
A	A10	△ COIL(P)-COIL(S) => COIL(P1)-COIL(P2)	13/Sep/'04	Y.ohtaki	Y.Akinaga	Juichi
–	A1	NEW RELEASE	20/Jun/'03	Y.ohtaki	H.Matsumoto	Juichi

SCALE	—	MATERIALS	TITLE: MVC650 CHOKE COIL SPEC
UNITS	m/m	FINISH	DRAWING No. A210-35-04 -C
3RD ANGLE PROJECTION			DENSEI-LAMBDA

R:\MVC650\DWG\A210350 4C.DWG