INTERCONNECTS

SERIES 800 & 801 • .100" GRID (.030" DIA. PINS), STRAIGHT & RIGHT ANGLE HEADERS AND SOCKETS • SINGLE ROW STRIPS

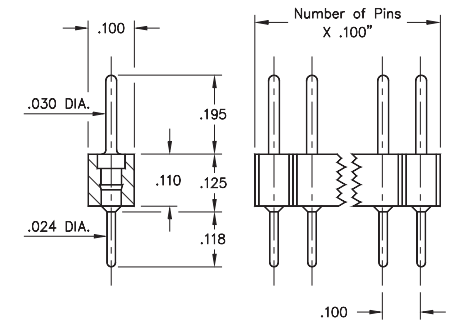

FIG. 1

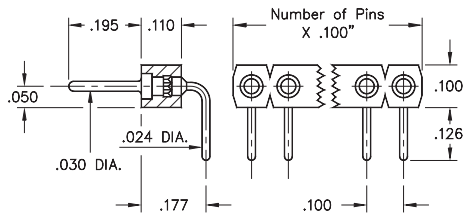

FIG. 2

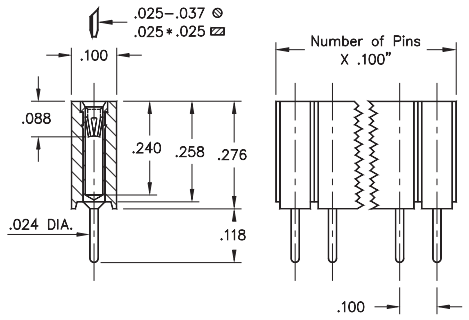

FIG. 3

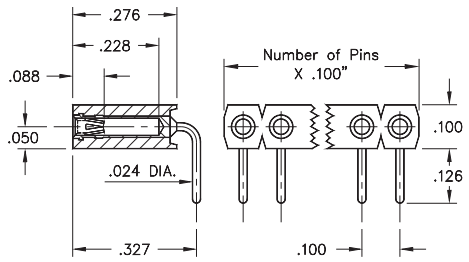

FIG. 4

- Pin interconnects available with straight MM #7007 or right angle MM #5005 solder tails. See page 215 for details
- Sockets are available with straight MM #1304 or right angle MM #1305 soldertails. See pages 177 and 179 for details
- MM #1304 and MM #1305 receptacles use Hi-Rel, 6-finger BeCu #47 contact rated at 4.5 amps. Receptacles accept .030" diameter and .025" square pins. See page 256 for details
- Insulators are high temperature thermoplastic, suitable for all soldering operations

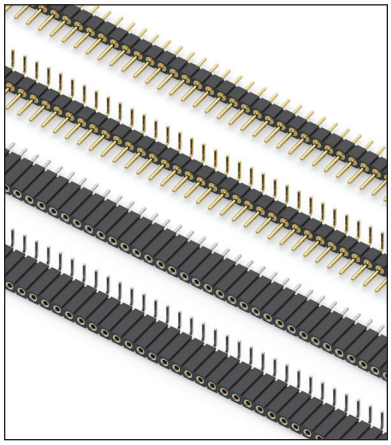

ORDERING INFORMATION

FIG. 1	**Series 800...10-001**	**Straight Pin Header**
	800-XX-0_ _-10-001000	
	Specify number of pins ↑ 01-64	
FIG. 2	**Series 800...20-001**	**Right Angle Pin Header**
	800-XX-0_ _-20-001000	
	Specify number of pins ↑ 02-64	

RoHS-2 2011/65/EU

XX=Plating Code See Below

For Electrical, Mechanical & Enviromental Data, See page 264

SPECIFY PLATING CODE XX=	10 ◆	90	40 ◆	
Pin Plating	10 µ" Au	200 µ" Sn/Pb	200 µ" Sn	

FIG. 3	**Series 801...10-001**	**Straight Socket**
	801-XX-0_ _-10-001000 ★	
	Specify number of pins ↑ 01-50	
FIG. 4	**Series 801...20-001**	**Right Angle Socket**
	801-XX-0_ _-20-001000 ★	
	Specify number of pins ↑ 01-50	

RoHS-2 2011/65/EU

XX=Plating Code See Below

For Electrical, Mechanical & Enviromental Data, See page 264

SPECIFY PLATING CODE XX=	91	93	99	41 ◆	43 ◆	44 ◆	47 ◆
Sleeve (Pin)	200 µ" Sn/Pb	200 µ" Sn/Pb	200 µ" Sn/Pb	200 µ" Sn	200 µ" Sn	200 µ" Sn	200 µ" Sn
Contact (Clip)	10 µ" Au	30 µ" Au	100 µ" Sn/Pb	10 µ" Au	30 µ" Au	100 µ" Sn	Au Flash

★ 44 Plating Non-Standard

MILL-MAX Mill-Max Mfg. Corp. • 190 Pine Hollow Road, P.O. Box 300, Oyster Bay, NY 11771 • 516-922-6000 • Fax: 516-922-9253 • www.mill-max.com