THIS DRAWING IS UNPUBLISHED. RELEASED FOR PUBLICATION -,- .
© COPYRIGHT - By - ALL RIGHTS RESERVED.

LOC	DIST
AJ	16

REVISIONS

P	LTR	DESCRIPTION	DATE	DWN	APVD
	L	REVISED PER ECO-12-008922	06SEP12	MGM	WM

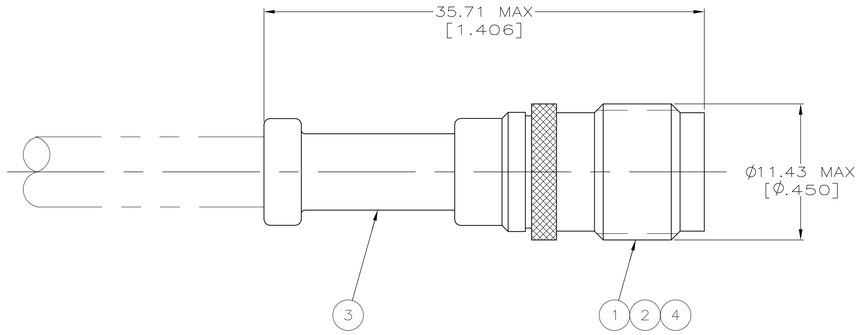

VIEW W

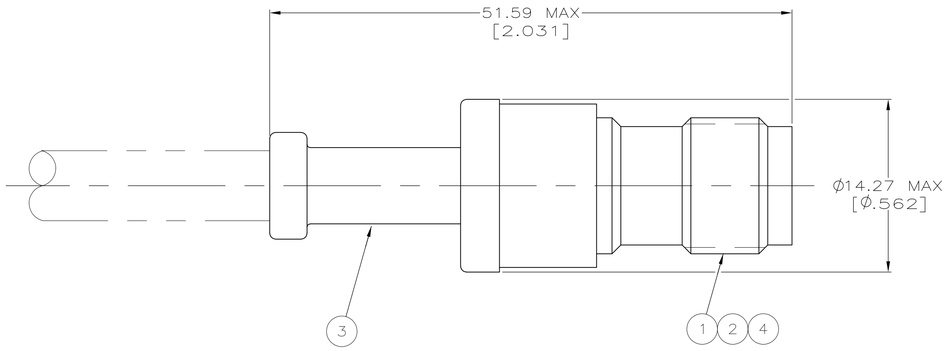

VIEW X

1. 00779 M39012/27B0016 AMP 225551-1 YY WW
2. 00779 M39012/27B0005 AMP 225551-2 YY WW
3. SEE I.S. 2299-2

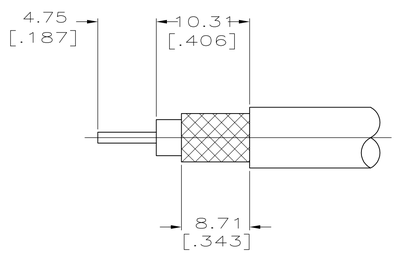

VIEW Y

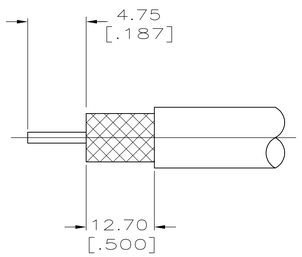

VIEW Z

RECOMMENDED STRIP LENGTH

	CABLE SIZE	STAMPING	CRIMP TOOL	VIEW	(4) GASKET QTY=1	(3) FERRULE QTY=1	(2) CONTACT QTY=1	(1) JACK ASSY QTY=1	PART NUMBER
	RG-142/U,142A/U & 142B/U	7-225551-6 AMP	220045-2	W & Y	225592-2	225560-1	225471-3	225468-1	7-225551-6
	RG-59B/U & 62B/U	7-225551-3 AMP	220045-3	W & Y	225592-3	225560-3	225471-2	225468-3	7-225551-3
	RG-58A/U,58C/U & BSX 7002-58C/U	7-225551-2 AMP	220045-2	W & Y	225592-1	225560-2	225471-1	225468-1	7-225551-2
OBSOLETE	RG-225/U	1-225551-2 AMP	220015-1	X & Z	332022	331987	225471-7	225597-2	1-225551-2
	RG-142/U,142A/U & 142B/U	00779 M39012/27B0006 AMP YY WW	220045-2	W & Y	–	9-225560-4	1-225471-1	3-225468-1	225551-6
	RG-141/U & 141A/U	00779 M39012/27B0015 AMP YY WW	220045-2	W & Y	225592-1	9-225560-5	1-225471-1	225468-1	225551-5
	RG-58A/U,58C/U & BSX 7002-58C/U	(2)	220045-2	W & Y	–	9-225560-5	225471-9	2-225468-1	225551-2
	RG-55A/U & 223/U	(1)	220045-2	W & Y	225592-2	9-225560-4	225471-9	225468-1	225551-1

THIS DRAWING IS A CONTROLLED DOCUMENT.

DIMENSIONS: INCHES

TOLERANCES UNLESS OTHERWISE SPECIFIED:
0 PLC ± –
1 PLC ± –
2 PLC ± 0.41 [.016]
3 PLC ± –
4 PLC ± –
ANGLES ± –

MATERIAL –
FINISH –

DWN B.SCOTT 3-6-91
CHK J. LIPPERT 3-11-91
APVD –
PRODUCT SPEC 108-12001
APPLICATION SPEC –
WEIGHT –

TE Connectivity

NAME JACK, WEATHERPROOF, SERIES, TNC

SIZE	CAGE CODE	DRAWING NO	RESTRICTED TO
A1	00779	C-225551	–

CUSTOMER DRAWING

SCALE	SHEET	REV
4:1	1 OF 1	L