THIS DRAWING IS UNPUBLISHED. RELEASED FOR PUBLICATION -,- .
© COPYRIGHT - RUTH, JEFFERY ALL RIGHTS RESERVED.

LOC	DIST
CM	00

REVISIONS

P	LTR	DESCRIPTION	DATE	DWN	APVD
	AB2	REDRAWN AND PER ECR 12-013810	24SEPT12	KH	TM

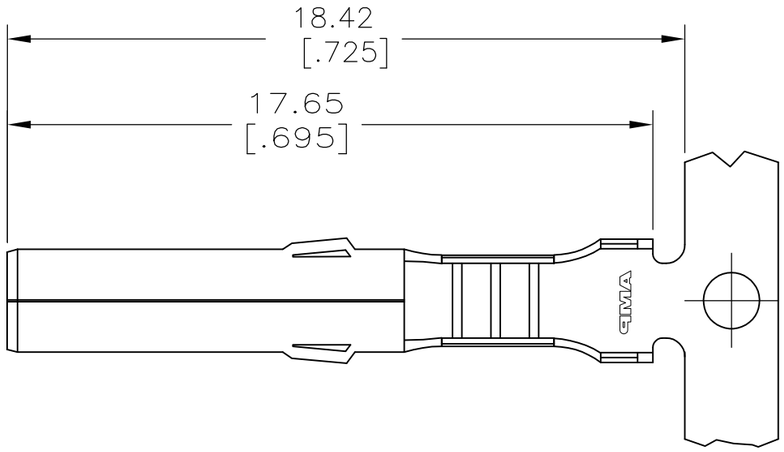

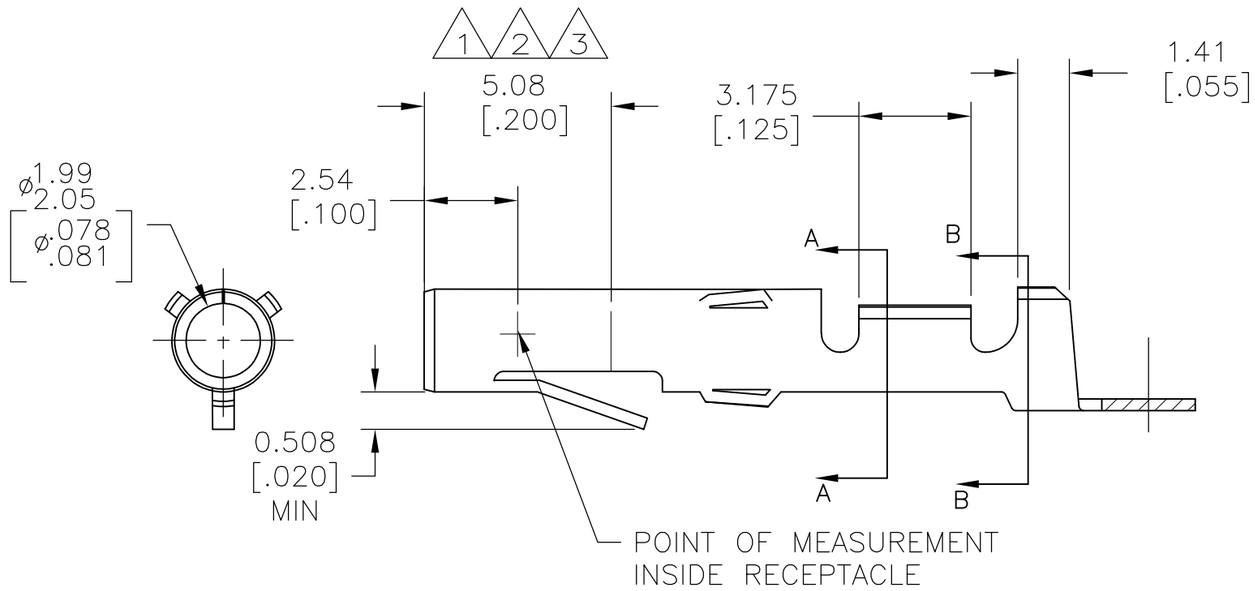

1. NICKEL ON ENTIRE TERMINAL WITH 0.00076[.000030] GOLD OVER INSIDE OF MATING AREA AND WIRE BARREL.
2. GOLD FLASH OVER NICKEL ON ENTIRE TERMINAL WITH 0.00076[.000030] GOLD OVER MATING AREA.
3. NICKEL ON ENTIRE TERMINAL WITH 0.00076[.000030] GOLD OVER INSIDE OF MATING AREA.
4. WIRE RANGE 24-18.
5. INSULATION DIA .100 MAX.

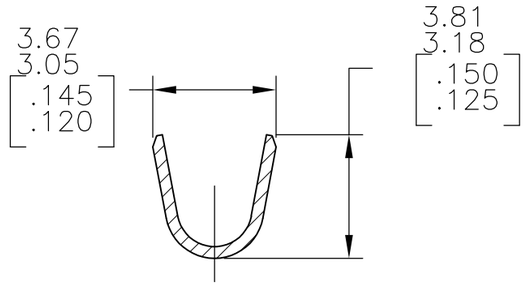

SECTION B-B

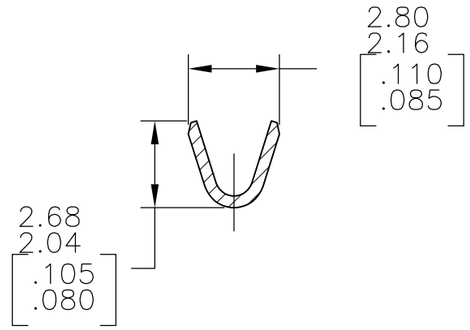

SECTION A-A

APPLICATOR TYPE	FINISH	MATERAIL	PART NO
MINI	GOLD 3	.012 BRASS	61314-7
MINI	GOLD 3	.012 PH BRZ	61314-6
MINI	GOLD 1	.012 BRASS	61314-5
MINI	PRE TIN	.012 PH BRZ	61314-4
MINI	—	.012 PH BRZ	61314-3
MINI	—	.012 BRASS	61314-2
MINI	PRE TIN	.012 BRASS	61314-1

THIS DRAWING IS A CONTROLLED DOCUMENT.

DIMENSIONS: mm [INCHES]

TOLERANCES UNLESS OTHERWISE SPECIFIED:

0 PLC	± -
1 PLC	± -
2 PLC	± 0.38 [.015]
3 PLC	± -
4 PLC	± -
ANGLES	± 1°0'

MATERIAL: SEE TABLE

FINISH: SEE TABLE

DWN KIRAN HOLAL 29JUN2012
CHK RUTH,JEFFERY 29JUN2012
APVD RUTH,JEFFERY 29JUN2012
PRODUCT SPEC —
APPLICATION SPEC —
WEIGHT —

TE Connectivity

NAME: SOCKET COMMERCIAL MATE-N-LOK™ —

SIZE	CAGE CODE	DRAWING NO	RESTRICTED TO
A3	00779	C-61314	—

CUSTOMER DRAWING

SCALE 6:1 SHEET 1 OF 1 REV AB2