PWS-770

10.4" Semi-rugged Tablet PC with Intel® Atom™ N2600 Processor

Windows Embedded Windows 7 CE FCC

Features

- Efficient Intel® Atom™ N2600 1.6 GHz processor
- 10.4" XGA LED panel, WAV transflective-LCD, high brightness 300 cd/m²
- Hot swap, high capacity Li-ion battery provides 8 hours of operation(*1)
- Rich array of I/O ports supports a variety of applications
- IP54-certified, 3 ft drop rating from 90 cm
- Complete communication: Wi-Fi/Bluetooth/GPS/WWAN (3.75G)
- Optional data capture modules: barcode scanner / MSR / RFID
- Lightweight, 1.2 kg

IP54 3ft

Introduction

The PWS-770 is a semi-rugged mobile tablet PC featuring a 10.4" XGA resolution TFT LCD panel and an Intel Atom N2600 1.6 GHz processor. It comes with 802.11 b/g/n WiFi, Bluetooth 4.0, a 2M pixel camera. It also has built-in optional GPS and WWAN 3.75G antenna. PWS-770 optional devices include an RFID module with antenna, a 1D/2D barcode scanner and an MSR card reader. PWS-770 is a fully functional communication device suitable for any outdoor application. It carries an IP54 rating for protection against dirt, dust and water. PWS-770 can also survive a 3-foot drop. Advantech's PWS-770 is a strong tablet PC for industrial and commercial use in any environment.

Specifications

Motherboard	CPU	Intel Atom N2600/1.6 GHz	
	Chipsets	Intel NM10	
	Memory	SODIMM DDRIII to 2 GB	
	Storage	Supports mSATA SSD 32 GB ~ 128 GB	
Display & Touchscreen	Display	10.4" XGA (1024 x 768) (Transflective) LCD 300 cd/m² LED back light	
	Touch Panel	4-wire resistive touch panel	
System	Wireless Communication	802.11b/g/n WLAN built-in with integrated antenna Bluetooth class 2, 4.0 built-in with integrated antenna GPS (Optional); WWAN (Optional)	
	Camera	CMOS 2.0M pixel Camera module	
	Security	1. Password security 2. TPM 1.2	
	Application Buttons	Power button x 1 (L side) Function keys x 3 (F1~F3) Tablet PC keyboard x 1 Mode key x 1	Enter key x 1 Activate key x 2 (S1 & S2): Activate barcode reader, camera & dimming adjustment required to control the brightness
	LED Status Indicator	Power LED Storage LED	WLAN LED
	I/O Interfaces	USB 2.0 x 2 Serial port RS-232 x 1 VGA port x 1 Audio in jack x 1 Audio out jack x 1	Internal mono microphone x 1 DC-in x 1 Docking port (32-pin; USB/PCIE/DC) SIM slot (with WWAN option)
	Audio Output	1 Watt speaker x 2	
	Expansion Port	SD memory card x 1 (SD 2.0/SDHC)	
	Battery	Main battery: 3S1P 11.1V 1900 mAhr Hot-Swap 2nd battery: 3S2P 11.1V 5000mAh (Optional)	
	Power Adapter	AC Adapter: AC 100V-240V 50/60Hz, 19V/3.42A/65W, Auto Sensing/Switching worldwide power supply Car Adapter: AC120V-320V (Optional)	
	OS Support	Windows 7 Professional /Embedded	
Optional Devices	Data Collection	CMOS 2.0M pixel Camera module 1D/2D Barcode MSR; HF RFID	
Environmental Specifications	Temperature & Humidity	Operating Temperature: -10° C~ +50° C (Charge: 0° C ~ +40° C) Storage Temperature -20 to +60° C Operating Humidity 5% ~ 95% @ 40° C	
	IP Rating	IP54	
	Drop	3-foot drop onto Plywood, MIL-STD-810G 516.5 Precedure VI	
Certifications	EMC	CE/FCC/CCC/BSMI/C-Tick	
	Safety	UL/CE/CB/CCC	

(1) - Internal battery + external 2nd battery 5000mAh in Battery Mark with maximum peripherals connected (Wi-Fi & BT enabled) the battery life up to 7.5hrs
- Internal battery + external 2nd battery 5000mAh idle with minimum peripherals connected in OS (Wi-Fi & BT disabled) the battery life up to 8.5 hrs

All product specifications are subject to change without notice

Last updated : 27-Feb-2013

Dimensions

Unit: mm

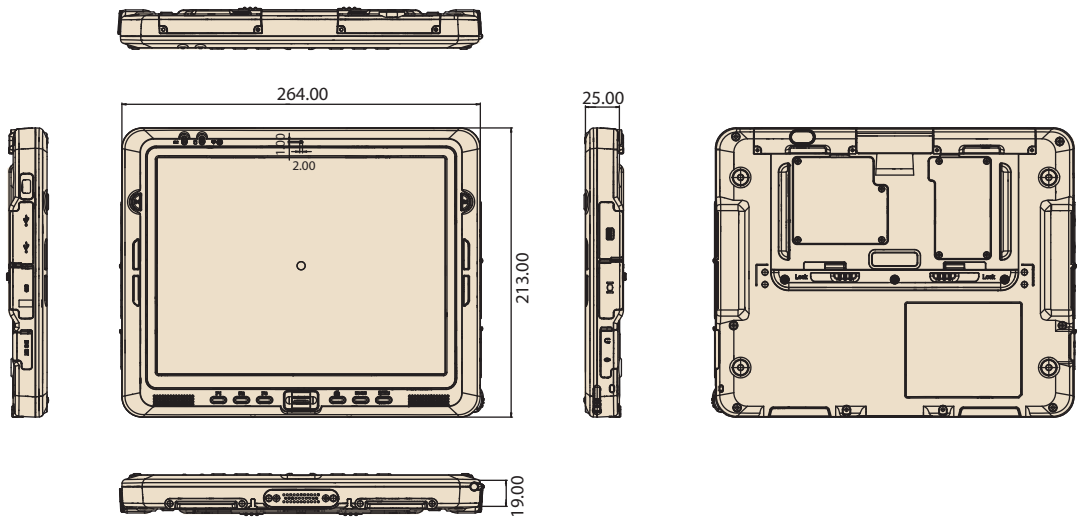

Specifications Cont.

Accessories	Accessories	AC adaptor (19V, 65W) Stylus (default) VESA Mounting Bracket Carrying Bag Car adapter DC10-32V 90W 18.5V 4.9A	Hand strap Desktop stand Desk Docking Vehicle cradle (Q3, 2013) 2nd battery
Dimensions & Weight	Dimensions	264 (L) x 213 (W) x 18 (H) mm	
	Weight	Under 1.2 kg without rubber bumper & optional devices	

I/O

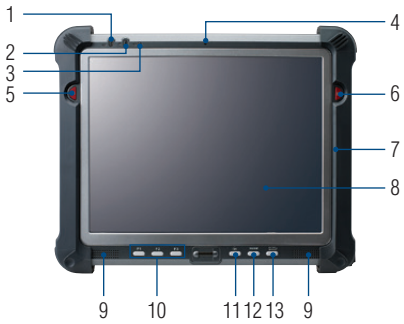

1. Power LED
2. Storage LED
3. WLAN LED
4. Microphone
5. Brightness button (Decrease brightness)
6. Brightness button (Increase brightness)
7. Rubber bumper
8. Touch-sensitive display
9. Speakers
10. Function keys
11. Keyboard button
12. Mode button
13. Enter button

1. Power button
2. USB ports (2)
3. SD card slot
4. DC-in jack
5. Serial port
6. VGA port
7. Headphone jack
8. Microphone jack

Ordering Information

Part Number	Description
PWS-770-N3A0EC001E	10.4 Normal N2600 RAM2G SSD32 WL BT Win7 EM
PWS-770-N3AWEC001E	10.4 Normal N2600 RAM2G SSD32 WL BT GPS 3G Win7 EM
PWS-770-S3A0PC001E	10.4 Sunlight N2600 RAM2G SSD32 WL BT Win7 PRO
PWS-770-S3AWPC001E	10.4 Sunlight N2600 RAM2G SSD32 WL BT GPS 3G Win7 PRO EN

Accessories

Part Number	Description
S10A-93-S10A6-011	VESA MOUNT M6 with packing
S10A-93-S10A6-021	VESA MOUNT M4 with packing
S10A-93-S10A1-001	Carrying bag
S10A-93-S10AA-002	Handstrap with packing Ver 2.0
S10A-93-S10A6-001	Stand with packing
1757002943	ADAPTER 100-240V 65W 19V 3.42A
9680014043	Car ADAPTER DC 10-32V 90W 18.5V 4.9A W/O PFC
PWS-770-BAT100E	PWS-770 2nd Battery (3760mAh)
PWS-770-BAT200E	PWS-770 2nd Battery (5000mAh)
PWS-770-Cradle00E	PWS-770 Desk Cradle
PWS-770-VCRADLE00E	PWS-770 Vehicle Docking (Q3, 2013)