THIS DRAWING IS UNPUBLISHED. RELEASED FOR PUBLICATION 20
© COPYRIGHT 20 BY - ALL RIGHTS RESERVED.

REVISIONS

P	LTR	DESCRIPTION	DATE	DWN	APVD
	A	INITIAL RELEASE	10JUN2015	GY	CW
	A1	ECR-18-009564	25SEP2018	CD	CW

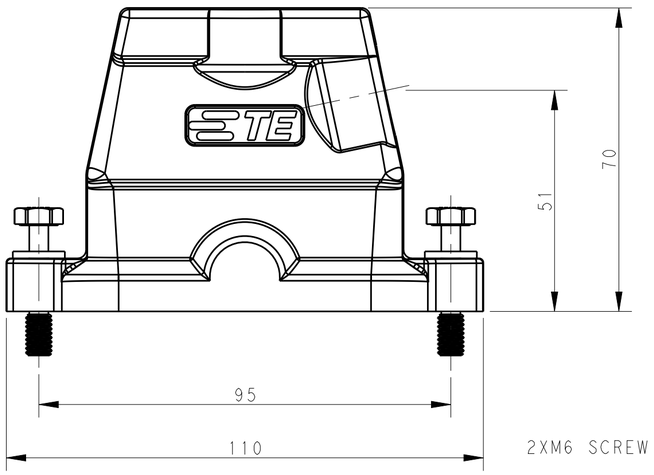

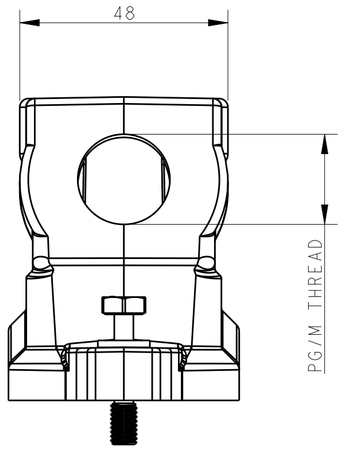

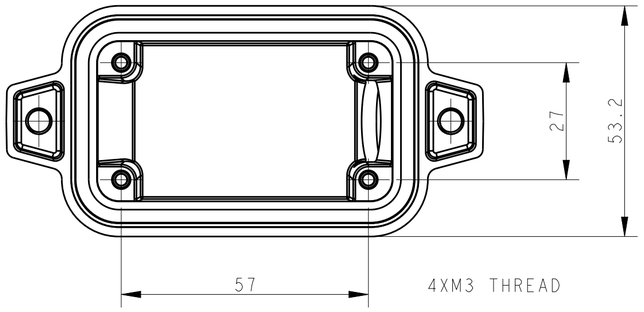

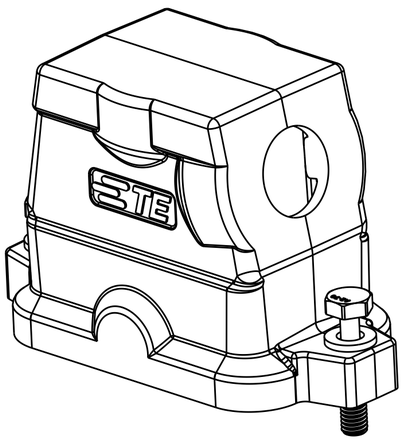

NOTES:
1. TECHNICAL CHARACTERISTICS:
   HOOD MATERIAL: DIE CAST ALUMINIUM ALLOY
   SURFACE TREATMENT: SEE TABLE
   DEGREE OF PROTECTION: IP68 (MATED)

注释
1. 技术参数：
   壳体材料： 铝合金
   表面处理： 见表格
   防护等级： IP68 （配合）

THIS DRAWING IS A CONTROLLED DOCUMENT.

DIMENSIONS: mm

TOLERANCES UNLESS OTHERWISE SPECIFIED:
0 PLC ±-
1 PLC ±-
2 PLC ±-
3 PLC ±-
4 PLC ±-
ANGLES ±-

MATERIAL -
FINISH -

DWN 10JUN2015 Gino.Yao
CHK 10JUN2015 Chris.Wang
APVD 10JUN2015 Xiang.Xu
PRODUCT SPEC 108-137014
APPLICATION SPEC 114-137014
WEIGHT -

TE Connectivity

NAME H10BPR-TSHC-PG/M

SIZE	CAGE CODE	DRAWING NO	RESTRICTED TO
A2	-	C-T191210XXXXX00	-

Customer Drawing | SCALE 1:1 | SHEET 1 OF 2 | REV A1

THIS DRAWING IS UNPUBLISHED. RELEASED FOR PUBLICATION 20
© COPYRIGHT 20 BY - ALL RIGHTS RESERVED.

REVISIONS

P	LTR	DESCRIPTION	DATE	DWN	APVD
	-	SEE SHEET 1	-	-	-

NOTE:

SEE SHEET 1

备注:

见 SHEET 1

PART NUMBER 料 号	SURFACE TREATMENT 表面处理	PART DESCRIPTION 描 述		PG/M THREAD-1 螺纹孔-1	TYPE 类型
T191210125-001	POWDER COATED, DEEP GREY 粉末喷涂,深灰色	H10BPR-TSHC-M25	H10BPR HOOD,CENTER LOCKING,SIDE ENTRY M25,POWDER COATED,DEEP GREY,NO LOGO H10BPR上壳,中部锁定,侧出M25,深灰色粉末喷涂,无LOGO	M25	TYPE2 类型2
T191210132-001	POWDER COATED, DEEP GREY 粉末喷涂,深灰色	H10BPR-TSHC-M32	H10BPR HOOD,CENTER LOCKING,SIDE ENTRY M32,POWDER COATED,DEEP GREY,NO LOGO H10BPR上壳,中部锁定,侧出M32,深灰色粉末喷涂,无LOGO	M32	
T191210132-000	POWDER COATED, GREY 粉末喷涂,灰色	H10BPR-TSHC-M32	H10BPR HOOD,CENTER LOCKING,SIDE ENTRY M32,POWDER COATED,GREY H10BPR上壳,中部锁定,侧出M32,灰色粉末喷涂	M32	TYPE1 类型1
T191210129-000	POWDER COATED, GREY 粉末喷涂,灰色	H10BPR-TSHC-PG29	H10BPR HOOD,CENTER LOCKING,SIDE ENTRY PG29,POWDER COATED,GREY H10BPR上壳,中部锁定,侧出PG29,灰色粉末喷涂	PG29	
T191210125-000	POWDER COATED, GREY 粉末喷涂,灰色	H10BPR-TSHC-M25	H10BPR HOOD,CENTER LOCKING,SIDE ENTRY M25,POWDER COATED,GREY H10BPR上壳,中部锁定,侧出M25,灰色粉末喷涂	M25	
T191210121-000	POWDER COATED, GREY 粉末喷涂,灰色	H10BPR-TSHC-PG21	H10BPR HOOD,CENTER LOCKING,SIDE ENTRY PG21,POWDER COATED,GREY H10BPR上壳,中部锁定,侧出PG21,灰色粉末喷涂	PG21	
T191210120-000	POWDER COATED, GREY 粉末喷涂,灰色	H10BPR-TSHC-M20	H10BPR HOOD,CENTER LOCKING,SIDE ENTRY M20,POWDER COATED,GREY H10BPR上壳,中部锁定,侧出M20,灰色粉末喷涂	M20	
T191210116-000	POWDER COATED, GREY 粉末喷涂,灰色	H10BPR-TSHC-PG16	H10BPR HOOD,CENTER LOCKING,SIDE ENTRY PG16,POWDER COATED,GREY H10BPR上壳,中部锁定,侧出PG16,灰色粉末喷涂	PG16	
T191210132-000	POWDER COATED,SILVER WHITE 粉末喷涂,银白色	H10BPR-TSHC-M32	H10BPR HOOD,CENTER LOCKING,SIDE ENTRY M32,POWDER COATED,SILVER WHITE H10BPR上壳,中部锁定,侧出M32,银白色粉末喷涂	M32	
T191210129-000	POWDER COATED,SILVER WHITE 粉末喷涂,银白色	H10BPR-TSHC-PG29	H10BPR HOOD,CENTER LOCKING,SIDE ENTRY PG29,POWDER COATED,SILVER WHITE H10BPR上壳,中部锁定,侧出PG29,银白色粉末喷涂	PG29	
T191210125-000	POWDER COATED,SILVER WHITE 粉末喷涂,银白色	H10BPR-TSHC-M25	H10BPR HOOD,CENTER LOCKING,SIDE ENTRY M25,POWDER COATED,SILVER WHITE H10BPR上壳,中部锁定,侧出M25,银白色粉末喷涂	M25	
T191210121-000	POWDER COATED,SILVER WHITE 粉末喷涂,银白色	H10BPR-TSHC-PG21	H10BPR HOOD,CENTER LOCKING,SIDE ENTRY PG21,POWDER COATED,SILVER WHITE H10BPR上壳,中部锁定,侧出PG21,银白色粉末喷涂	PG21	
T191210120-000	POWDER COATED,SILVER WHITE 粉末喷涂,银白色	H10BPR-TSHC-M20	H10BPR HOOD,CENTER LOCKING,SIDE ENTRY M20,POWDER COATED,SILVER WHITE H10BPR上壳,中部锁定,侧出M20,银白色粉末喷涂	M20	
T191210116-000	POWDER COATED,SILVER WHITE 粉末喷涂,银白色	H10BPR-TSHC-PG16	H10BPR HOOD,CENTER LOCKING,SIDE ENTRY PG16,POWDER COATED,SILVER WHITE H10BPR上壳,中部锁定,侧出PG16,银白色粉末喷涂	PG16	
T191200132-000	POWDER COATED,BLACK 粉末喷涂,黑色	H10BPR-TSHC-M32	H10BPR HOOD,CENTER LOCKING,SIDE ENTRY M32,POWDER COATED,BLACK H10BPR上壳,中部锁定,侧出M32,黑色粉末喷涂	M32	
T191200129-000	POWDER COATED,BLACK 粉末喷涂,黑色	H10BPR-TSHC-PG29	H10BPR HOOD,CENTER LOCKING,SIDE ENTRY PG29,POWDER COATED,BLACK H10BPR上壳,中部锁定,侧出PG29,黑色粉末喷涂	PG29	
T191200125-000	POWDER COATED,BLACK 粉末喷涂,黑色	H10BPR-TSHC-M25	H10BPR HOOD,CENTER LOCKING,SIDE ENTRY M25,POWDER COATED,BLACK H10BPR上壳,中部锁定,侧出M25,黑色粉末喷涂	M25	
T191200121-000	POWDER COATED,BLACK 粉末喷涂,黑色	H10BPR-TSHC-PG21	H10BPR HOOD,CENTER LOCKING,SIDE ENTRY PG21,POWDER COATED,BLACK H10BPR上壳,中部锁定,侧出PG21,黑色粉末喷涂	PG21	
T191200120-000	POWDER COATED,BLACK 粉末喷涂,黑色	H10BPR-TSHC-M20	H10BPR HOOD,CENTER LOCKING,SIDE ENTRY M20,POWDER COATED,BLACK H10BPR上壳,中部锁定,侧出M20,黑色粉末喷涂	M20	
T191200116-000	POWDER COATED,BLACK 粉末喷涂,黑色	H10BPR-TSHC-PG16	H10BPR HOOD,CENTER LOCKING,SIDE ENTRY PG16,POWDER COATED,BLACK H10BPR上壳,中部锁定,侧出PG16,黑色粉末喷涂	PG16	

THIS DRAWING IS A CONTROLLED DOCUMENT.

DIMENSIONS: mm

TOLERANCES UNLESS OTHERWISE SPECIFIED:
0 PLC ±-
1 PLC ±-
2 PLC ±-
3 PLC ±-
4 PLC ±-
ANGLES ±-

MATERIAL - -

FINISH - -

DWN Gino.Yao 10JUN2015
CHK Chris.Wang 10JUN2015
APVD Xiang.Xu 10JUN2015
PRODUCT SPEC 108-137014
APPLICATION SPEC 114-137014
WEIGHT -

TE Connectivity

NAME H10BPR-TSHC-PG/M

SIZE A2 | CAGE CODE - | DRAWING NO C-T191210XXXXX00 | RESTRICTED TO -

Customer Drawing | SCALE 1:1 | SHEET 2 OF 2 | REV A1