Product datasheet
Characteristics

TM3DI16

Main

Range of product	Modicon TM3
Product or component type	Discrete input module
Range compatibility	Modicon M221 Modicon M241 Modicon M251
Discrete input number	16 input conforming to IEC 61131-2 type 3
Discrete input logic	Sink or source (positive/negative)
Discrete input voltage	24 V
Discrete input current	7 mA input

Complementary

Discrete I/O number	16
Current consumption	5 mAat 5 V DC via bus connector at state off 0 mA at 24 V DC via bus connector at state on 0 mAat 24 V DC via bus connector at state off 40 mAat 5 V DC via bus connector at state on
Discrete input voltage type	DC
Voltage state 1 guaranteed	15...28.8 V input
Current state 1 guaranteed	>= 2.5 mA for input
Voltage state 0 guaranteed	0...5 V input
Current state 0 guaranteed	<= 1 mA for input
Input impedance	3.4 kOhm
Response time	4 ms turn-on 4 ms turn-off
Local signalling	1 LED per channel greenfor input status
Electrical connection	Removable screw terminal block pitch 3.81 mm with 10 terminal(s) of 1.5 mm² connection capacity for inputs
Insulation	Non-insulated between inputs 500 V AC between input and internal logic
Marking	CE
Mounting support	Top hat type TH35-15 rail conforming to IEC 60715 Top hat type TH35-7.5 rail conforming to IEC 60715 Plate or panel with fixing kit
Height	3.54 in (90 mm)
Depth	3.33 in (84.6 mm)
Width	1.08 in (27.4 mm)
Product weight	0.22 lb(US) (0.1 kg)

Environment

standards	EN/IEC 61131-2 EN/IEC 61010-2-201
product certifications	C-Tick CULus
resistance to electrostatic discharge	4 kV (on contact) conforming to EN/IEC 61000-4-2 8 kV (in air) conforming to EN/IEC 61000-4-2
resistance to electromagnetic fields	9.14 V/yd (10 V/m) at 80 MHz...1 GHz conforming to EN/IEC 61000-4-3 2.74 V/yd (3 V/m) at 1.4 GHz...2 GHz conforming to EN/IEC 61000-4-3 0.91 V/yd (1 V/m) at 2 GHz...3 GHz conforming to EN/IEC 61000-4-3
resistance to magnetic fields	30 A/m 50/60 Hz conforming to EN/IEC 61000-4-8
resistance to fast transients	1 kV I/O conforming to EN/IEC 61000-4-4

surge withstand	1 kV I/O (DC) in common mode conforming to EN/IEC 61000-4-5
resistance to conducted disturbances	10 Vrmsat 0.15...80 MHz conforming to EN/IEC 61000-4-6 3 Vrmsat spot frequency (2, 3, 4, 6.2, 8.2, 12.6, 16.5, 18.8, 22, 25 MHz) conforming to Marine specification (LR, ABS, DNV, GL)
electromagnetic emission	Radiated emissions, test level: 40 dBµV/m QP with class A, condition of test: 10 m (radio frequency: 30...230 MHz) conforming to EN/IEC 55011 Radiated emissions, test level: 47 dBµV/m QP with class A, condition of test: 10 m (radio frequency: 230...1000 MHz) conforming to EN/IEC 55011
ambient air temperature for operation	14...131 °F (-10...55 °C) horizontal installation -10...35 °C vertical installation
ambient air temperature for storage	-13...158 °F (-25...70 °C)
relative humidity	10...95 % without condensation in operation 10...95 % without condensation in storage
IP degree of protection	IP20 with protective cover in place
pollution degree	2
operating altitude	0...6561.68 ft (0...2000 m)
storage altitude	0...9842.52 ft (0...3000 m)
vibration resistance	3.5 mm (vibration frequency: 5...8.4 Hz) on DIN rail 3 gn (vibration frequency: 8.4...150 Hz) on DIN rail 3.5 mm (vibration frequency: 5...8.4 Hz) on panel 3 gn (vibration frequency: 8.4...150 Hz) on panel
shock resistance	15 gn (test wave duration:11 ms)

Offer Sustainability

Green Premium product	Green Premium product
Compliant - since 1348 - Schneider Electric declaration of conformity	Compliant - since 1348 - Schneider Electric declaration of conformity
Reference not containing SVHC above the threshold	Reference not containing SVHC above the threshold
Available	Available
Available	Available
WARNING: This product can expose you to chemicals including:	WARNING: This product can expose you to chemicals including:
Lead and lead compounds, which is known to the State of California to cause cancer and birth defects or other reproductive harm.	Lead and lead compounds, which is known to the State of California to cause cancer and birth defects or other reproductive harm.
For more information go to www.p65warnings.ca.gov	For more information go to www.p65warnings.ca.gov

Dimensions

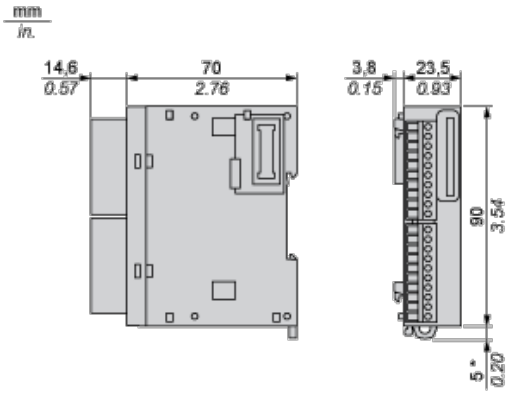

(*) 8.5 mm/0.33 in. when the clamp is pulled out.

Spacing Requirements

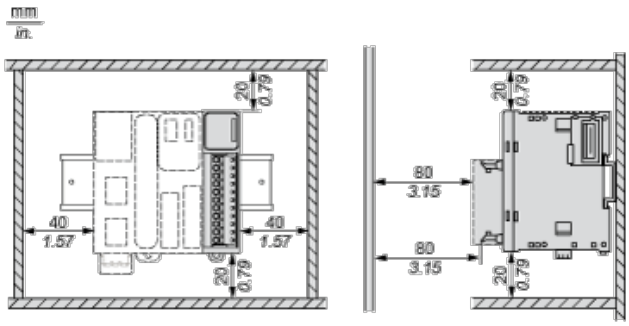

Mounting on a Rail

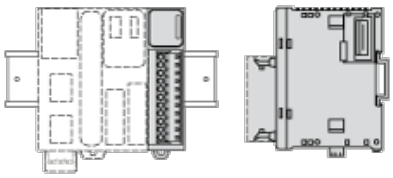

Incorrect Mounting

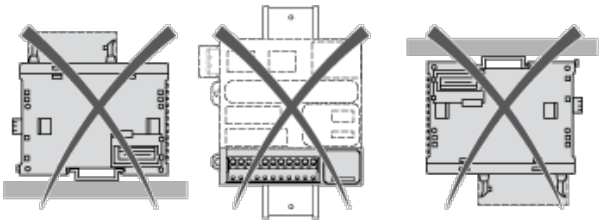

Mounting on a Panel Surface

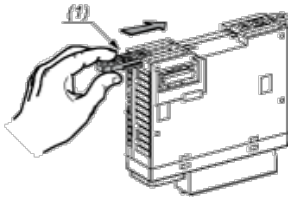

(1) Install a mounting strip

Mounting Hole Layout

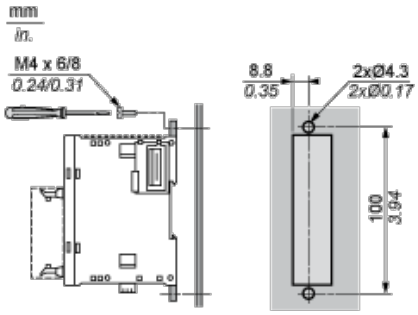

Digital Input Module (16-channel, 24 Vdc)

Wiring Diagrams

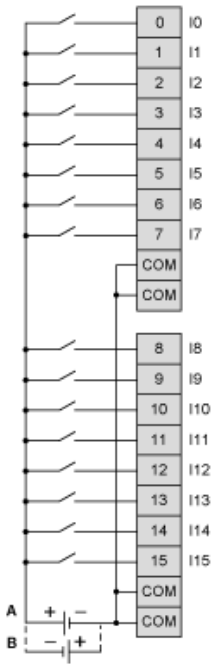

The 4 COM terminals are connected internally

(A) Sink wiring (positive logic)

(B) Source wiring (negative logic)