THIS DRAWING IS UNPUBLISHED. RELEASED FOR PUBLICATION -,- .
© COPYRIGHT - By - ALL RIGHTS RESERVED.

REVISIONS

| P | LTR | DESCRIPTION | DATE | DWN | APVD |
|---|---|---|---|---|---|
| | J | REVISED PER ECR-15-016073 | 06NOV2015 | RZ | RS |

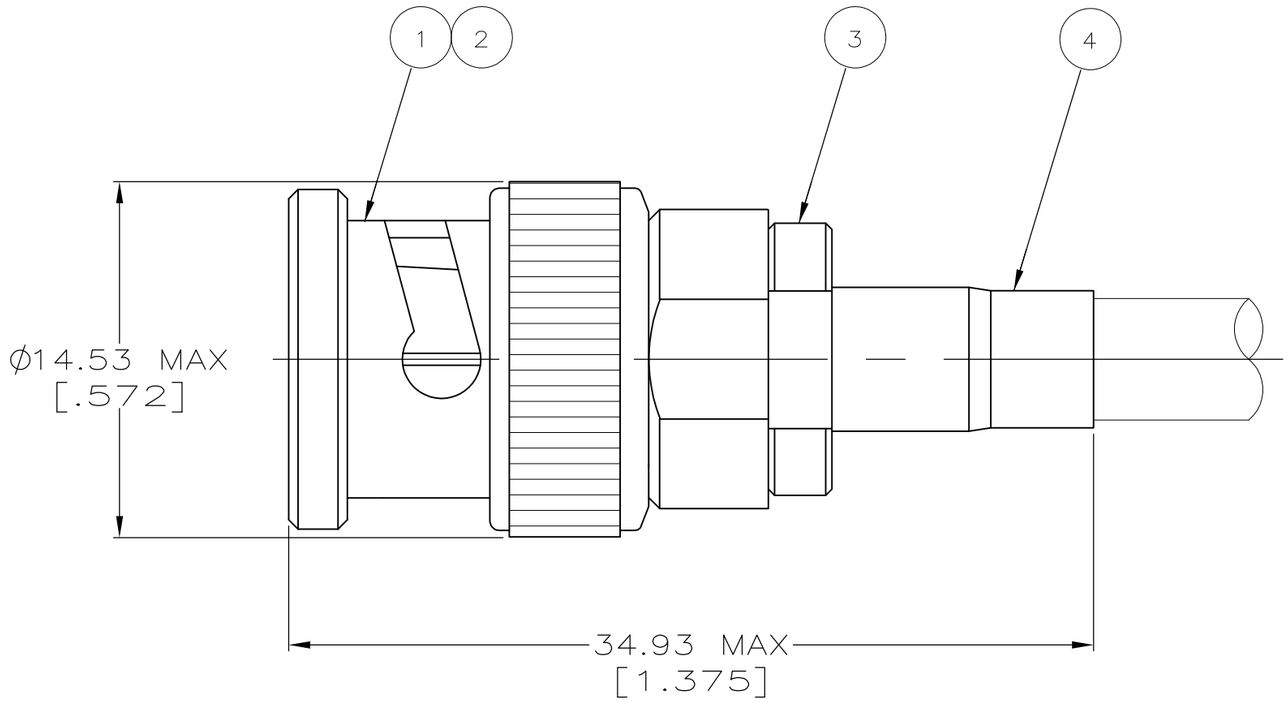


1. USE INSTRUCTION SHEET 1799-1
2. USE CRIMP TOOL 69140-1 WITH CABLE RG-58/U, 58A/U, 58B/U, 58C/U
3. USE CRIMP TOOL 69140-2 WITH CABLE RG-55/U, 55A/U, 55B/U AND 223/U

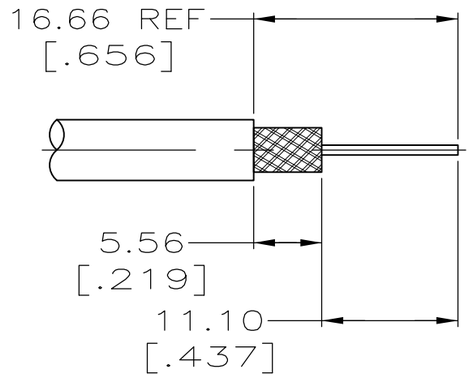


RECOMMENDED
STRIP LENGTH
SCALE 2:1

| | 4 FERRULE QTY=1 | 3 CRIMP END ASSEMBLY QTY=1 | 2 GASKET QTY=1 | 1 PLUG ASSEMBLY QTY=1 | PART NUMBER |
|---|---|---|---|---|---|
| OBSOLETE | – | – | – | – | 7-329444-1 |
| 3 | 9-329099-2 | 9-50780-0 | 2-329106-1 | 9-329804-0 | 2-329444-2 |
| 2 | 9-328663-0 | 9-50780-0 | 2-329106-1 | 9-329804-0 | 2-329444-1 |
| SUPERSEDED BY 2-329444-1 | – | – | – | – | 329444 |

THIS DRAWING IS A CONTROLLED DOCUMENT.

DIMENSIONS: mm [INCHES]

TOLERANCES UNLESS OTHERWISE SPECIFIED:
0 PLC ± –
1 PLC ± –
2 PLC ± 0.41 [.016]
3 PLC ± –
4 PLC ± –
ANGLES ± –

MATERIAL –
FINISH –

DWN MICHAEL E. COWHER 06FEB96
CHK FRANK P. MORANA 15FEB96
APVD FRANK P. MORANA 15FEB96
PRODUCT SPEC –
APPLICATION SPEC –
WEIGHT –

TE Connectivity

NAME PLUG, BNC – –

| SIZE | CAGE CODE | DRAWING NO | RESTRICTED TO |
|---|---|---|---|
| A3 | 00779 | C-329444 | – |

CUSTOMER DRAWING | SCALE 4:1 | SHEET 1 OF 1 | REV J