THIS DRAWING IS UNPUBLISHED. RELEASED FOR PUBLICATION 20
© COPYRIGHT 20 BY - ALL RIGHTS RESERVED.

REVISIONS

P	LTR	DESCRIPTION	DATE	DWN	APVD
	G1	REVISED PER ECR-16-011494	22JUN2017	NK	CX

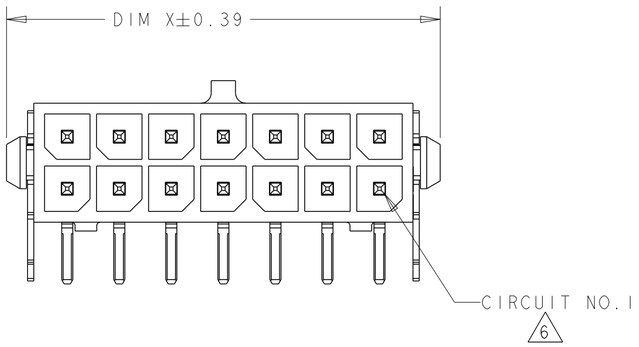

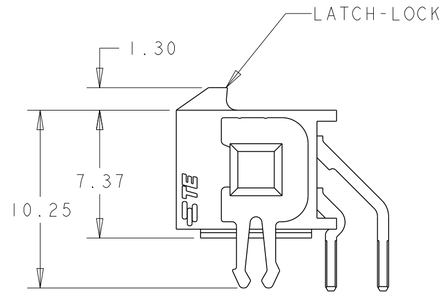

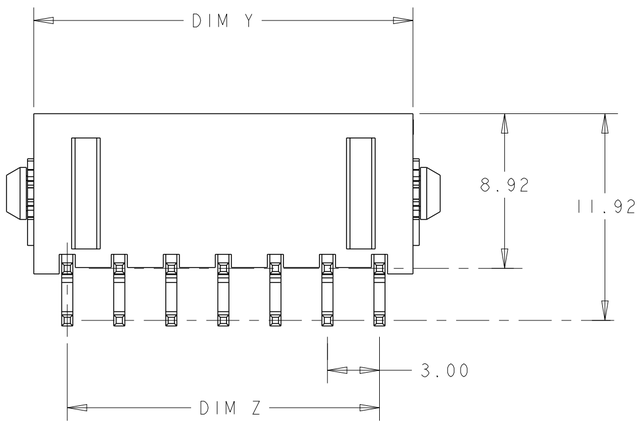

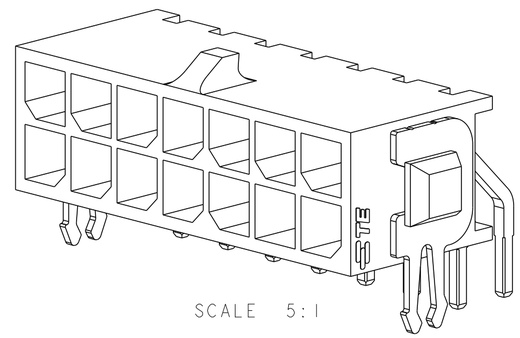

SCALE 5:1

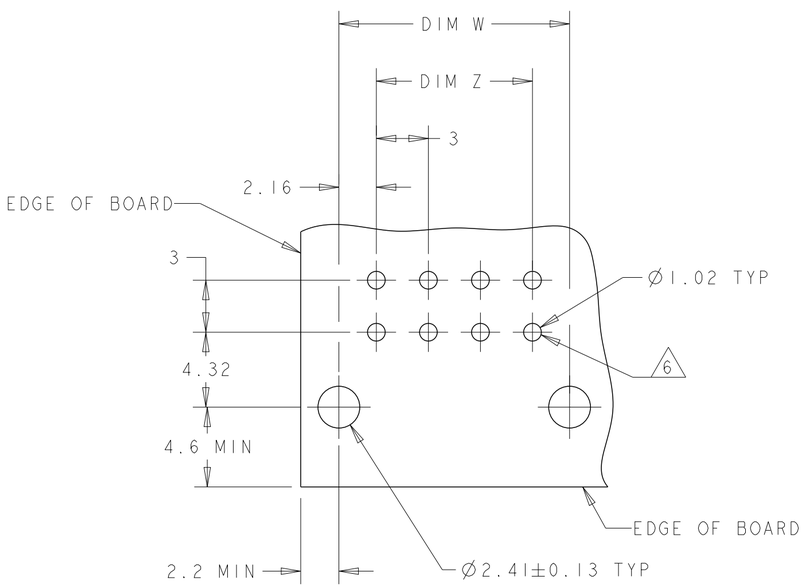

RECOMMENDED PCB LAYOUT 4
(COMPONENT SIDE)

1 MATERIAL;
CONTACTS - BRASS.
HOUSING - UL 94V-0 RATED HIGH TEMP NYLON, COLOR; BLACK.

2 PLATING;
CONTACTS - 0.76µm MINIMUM GOLD OVER 2.54µm MINIMUM NICKEL ON MATING AREA. 2.54µm TIN-LEAD MINIMUM OVER 2.54µm NICKEL MINIMUM ON SOLDER TAILS.
HOLDDOWNS - 2.54µm TIN-LEAD.

4 RECOMMENDED PC BOARD THICKNESS OF 1.57.

5 PLATING;
CONTACTS - 0.76µm MINIMUM GOLD OVER 2.54µm MINIMUM NICKEL ON MATING AREA. 2.54µm MATTE TIN MINIMUM OVER 2.54µm NICKEL MINIMUM ON SOLDER TAILS.
HOLDDOWNS - 2.54µm MATTE TIN.

6 CIRCUIT NUMBER 1 IS LOCATED AT THE BOTTOM RIGHT WITH THE LATCH-LOCK ON TOP LOOKING INTO THE CAVITIES

	FINISH	DIM Y	DIM W	DIM Z	DIM X	NO. OF POSN.	PART NUMBER
	5	36.86	37.30	33.00	40.00	24	5-794679-4
	5	33.86	34.30	30.00	37.00	22	5-794679-2
	5	30.86	31.30	27.00	34.00	20	5-794679-0
	5	27.86	28.30	24.00	31.00	18	4-794679-8
	5	24.86	25.30	21.00	28.00	16	4-794679-6
	5	21.86	22.30	18.00	25.00	14	4-794679-4
	5	18.86	19.30	15.00	22.00	12	4-794679-2
	5	15.86	16.30	12.00	19.00	10	4-794679-0
	5	12.86	13.30	9.00	16.00	8	3-794679-8
	5	9.86	10.30	6.00	13.00	6	3-794679-6
	5	6.86	7.30	3.00	10.00	4	3-794679-4
	5	3.86	4.30	-	7.00	2	3-794679-2
SUPERSEDED BY 5-794679-4	2	36.86	37.30	33.00	40.00	24	~~2-794679-4~~
SUPERSEDED BY 5-794679-2	2	33.86	34.30	30.00	37.00	22	~~2-794679-2~~
SUPERSEDED BY 5-794679-0	2	30.86	31.30	27.00	34.00	20	~~2-794679-0~~
SUPERSEDED BY 4-794679-8	2	27.86	28.30	24.00	31.00	18	~~1-794679-8~~
SUPERSEDED BY 4-794679-6	2	24.86	25.30	21.00	28.00	16	~~1-794679-6~~
SUPERSEDED BY 4-794679-4	2	21.86	22.30	18.00	25.00	14	~~1-794679-4~~
SUPERSEDED BY 4-794679-2	2	18.86	19.30	15.00	22.00	12	~~1-794679-2~~
SUPERSEDED BY 4-794679-0	2	15.86	16.30	12.00	19.00	10	~~1-794679-0~~
SUPERSEDED BY 3-794679-8	2	12.86	13.30	9.00	16.00	8	~~794679-8~~
SUPERSEDED BY 3-794679-6	2	9.86	10.30	6.00	13.00	6	~~794679-6~~
SUPERSEDED BY 3-794679-4	2	6.86	7.30	3.00	10.00	4	~~794679-4~~
SUPERSEDED BY 3-794679-2	2	3.86	4.30	-	7.00	2	~~794679-2~~

THIS DRAWING IS A CONTROLLED DOCUMENT.

DIMENSIONS: mm

TOLERANCES UNLESS OTHERWISE SPECIFIED:
0 PLC ±-
1 PLC ±-
2 PLC ±0.13
3 PLC ±-
4 PLC ±-
ANGLES ±-

MATERIAL 1

FINISH SEE TABLE

DWN B. HAYMAKER 12AUG99
CHK K. COBLE 12AUG99
APVD K. COBLE 12AUG99
PRODUCT SPEC -
APPLICATION SPEC -
WEIGHT -

TE Connectivity

NAME THRU-HOLE, RIGHT ANGLE, 30 GOLD HEADER, MECHANICAL BOARDLOCK, DUAL ROW, MICRO MATE-N-LOK™

SIZE A2 | CAGE CODE 00779 | DRAWING NO C-794679 | RESTRICTED TO -

CUSTOMER DRAWING | SCALE 4:1 | SHEET 1 OF 1 | REV G1

794679