THIS DRAWING IS UNPUBLISHED. RELEASED FOR PUBLICATION 20
© COPYRIGHT 20 BY - ALL RIGHTS RESERVED.

REVISIONS

P	LTR	DESCRIPTION	DATE	DWN	APVD
	A	INITIAL RELEASE	08JUL2015	DL	CW

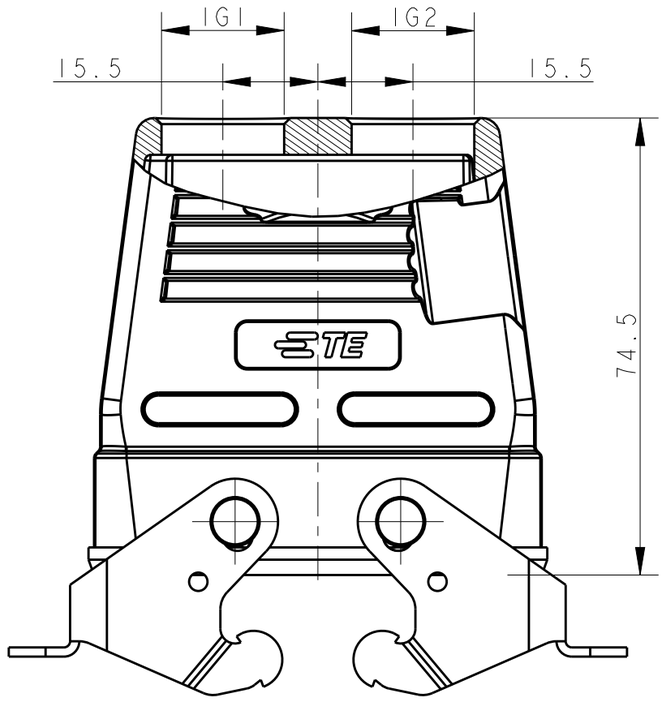

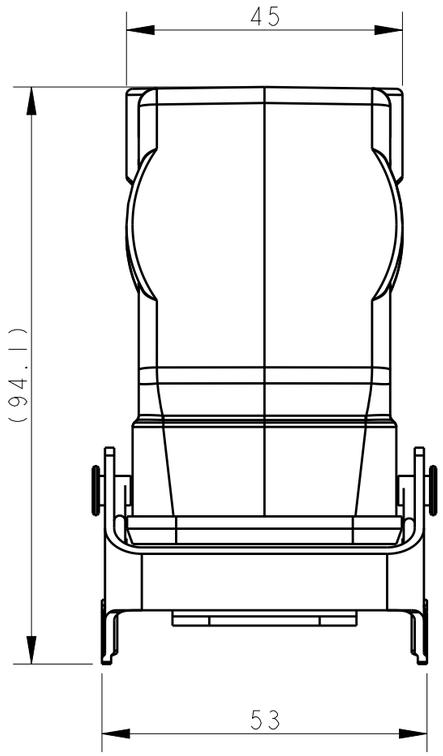

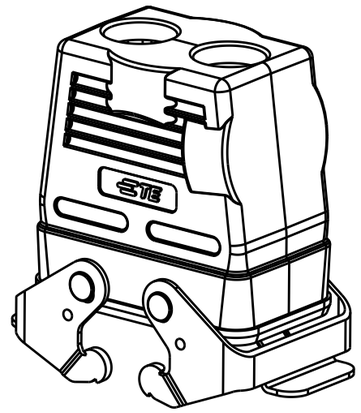

SCALE 3:5

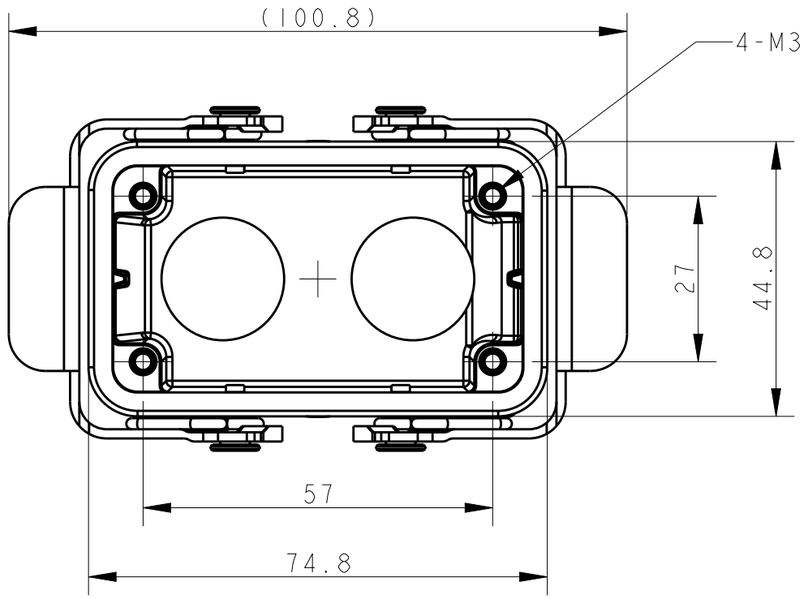

NOTES:
1. TECHNICAL CHARACTERISTICS:
   BODY MATERIAL: DIE CAST ALUMINIUM ALLOY
   SURFACE TREATMENT: POWDER-COATED, GRAY
   OPERATION TEMPERATURE: -40-+125°C
   DEGREE OF PROTECTION: IP65 (MATED)

注释：
1. 技术参数：
   主体材料： 铝合金
   表面处理： 粉末喷涂， 灰色
   工作温度： -40-+125°C
   防护等级： IP65(配合)

ASSEMBLY PART NUMBER	ASSEMBLY PART DESCRIPTION	IG1	IG2
T1750102216-000	H10B-TBFH-2PG16	PG16	PG16
T1750102220-000	H10B-TBFH-2M20	M20	M20

THIS DRAWING IS A CONTROLLED DOCUMENT.

DIMENSIONS: mm

TOLERANCES UNLESS OTHERWISE SPECIFIED:
0 PLC ±-
1 PLC ±-
2 PLC ±-
3 PLC ±-
4 PLC ±-
ANGLES ±-

MATERIAL: TBD -
FINISH: - -

DWN DAVID LI 08JUL2015
CHK CHRIS WANG 08JUL2015
APVD XU XIANG 08JUL2015
PRODUCT SPEC 108-137013
APPLICATION SPEC 114-137013
WEIGHT -

TE Connectivity

NAME H10B-TBFH-2PG/M

SIZE	CAGE CODE	DRAWING NO	RESTRICTED TO
A3	-	C-T17501022XX000	-

CUSTOMER DRAWING | SCALE 1:1 | SHEET 1 OF 1 | REV A

1470-19 (3/13)