THE INFORMATION CONTAINED IN THIS DRAWING IS THE SOLE PROPERTY OF AMPHENOL CABLES ON DEMAND. ANY REPRODUCTION OR DISCLOSURE, TO THIRD PARTIES, IN PART OR WHOLE, WITHOUT THE EXPRESS WRITTEN PERMISSION OF AMPHENOL CABLES ON DEMAND IS PROHIBITED.

REVISIONS

REV.	DESCRIPTION	DATE	APPROVED
A	NEW RELEASE	05/04/15	

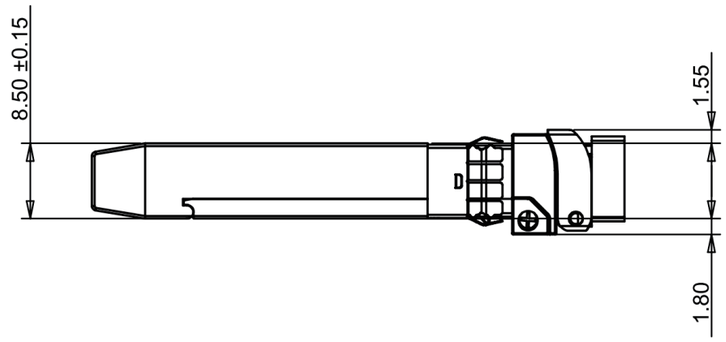

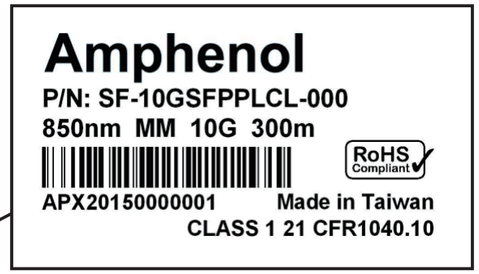

SERIAL NO. BREAKDOWN:

APXWWYYXXXSSSS

- SSSS → SERIAL NUMBER (EX: 0001, 0002, ETC.)
- XXX → LAST 3 DIGITS OF ACD P/N
- YY → MFG YEAR
- WW → MFG WEEK

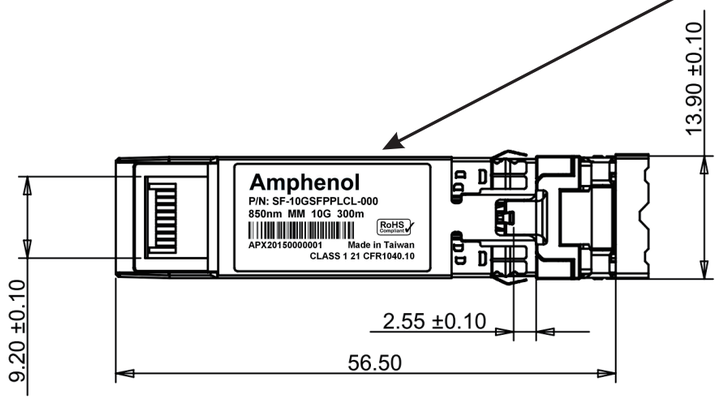

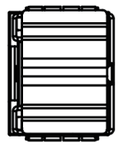

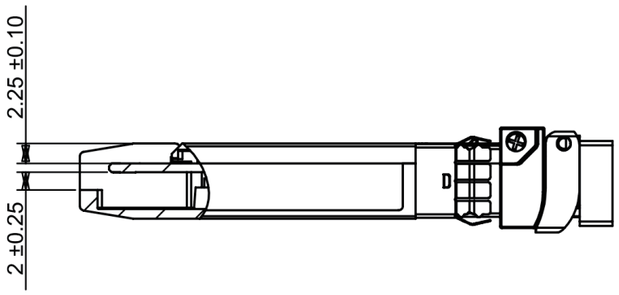

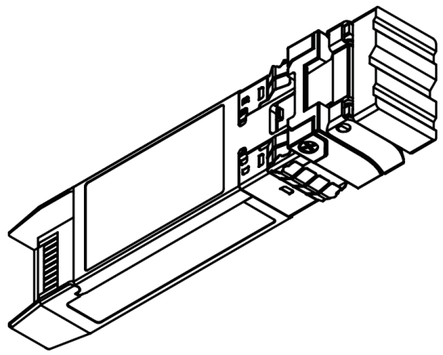

NOTES: UNLESS OTHERWISE SPECIFIED

UNLESS OTHERWISE SPECIFIED DIMENSIONS ARE IN INCHES TOLERANCES ARE:

DECIMALS		ANGLES
.X	±.X	± X°
.XX	±.XX	
.XXX	±.XXX	

THIRD ANGLE PROJECTION

EAR NO.		
APPROVALS		DATE
DRAWN	LF	05/04/15
CHECKED	BA	05/04/15
RESP ENG		
MFG ENG		

Amphenol Cables on Demand
20 VALLEY ST. ENDICOTT, NY 13760

SFP+ MM OPTICAL MODULE

SIZE	DWG. NO.	REV.
A	SF-10GSFPPLCL-000	A0

CAD FILE: SCALE SHEET 1 OF 2

THE INFORMATION CONTAINED IN THIS DRAWING IS THE SOLE PROPERTY OF AMPHENOL CABLES ON DEMAND. ANY REPRODUCTION OR DISCLOSURE, TO THIRD PARTIES, IN PART OR WHOLE, WITHOUT THE EXPRESS WRITTEN PERMISSION OF AMPHENOL CABLES ON DEMAND IS PROHIBITED.

REVISIONS			
REV.	DESCRIPTION	DATE	APPROVED
A	NEW RELEASE	05/04/15	

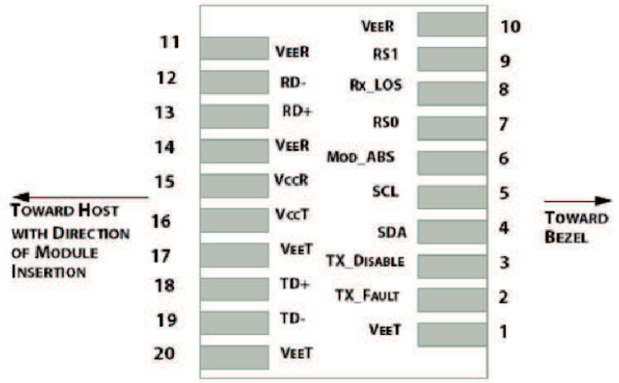

Module Interface to Host

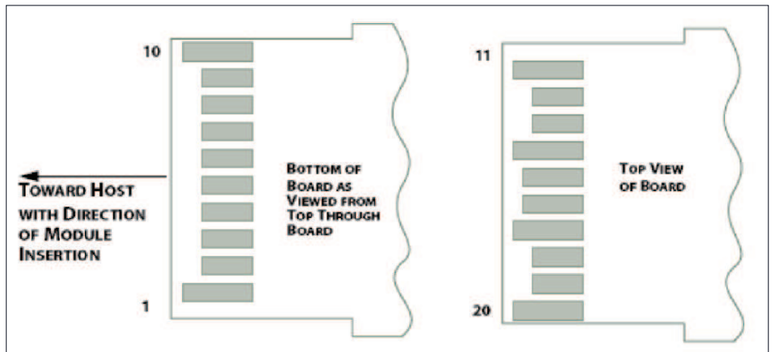

Module Contact Assignment

PIN	Logic	Symbol	Name / Description	Note
1		VeeT	Module Transmitter Ground	1
2	LVTTL-O	TX_Fault	Module Transmitter Fault	
3	LVTTL-I	TX_Dis	Transmtiter Disable; Turns off transmitter laser output	
4	LVTTL-I/O	SDA	2-Wire SerialInterface Data Line	2
5	LVTTL-I	SCL	2-Wire SerialInterface Clock	2
6		MOD_DEF0	Module Definition, Grounded in the module	
7	LVTTL-I	RS0	Not used	
8	LVTTL-O	RX_LOS	Receiver Loss of Signal Indication Active High	
9	LVTTL-I	RS1	Not used	
10		VeeR	Module Receiver Ground	1
11		VeeR	Module Receiver Ground	1
12	CML-O	RD-	Receiver Inverted Data Output	
13	CML-O	RD+	Receiver Data Output	
14		VeeR	Module Receiver Ground	1
15		VccR	Module Receiver 3.3 V Supply	
16		VccT	Module Receiver 3.3 V Supply	
17		VeeT	Module Transmitter Ground	1
18	CML-I	TD+	Transmtiter Non-Inverted Data Input	
19	CML-I	TD-	Transmitter Inverted Data Input	
20		VeeT	Module Transmitter Ground	1

NOTES: UNLESS OTHERWISE SPECIFIED

UNLESS OTHERWISE SPECIFIED DIMENSIONS ARE IN INCHES TOLERANCES ARE:

DECIMALS		ANGLES
.X	±.X	± X°
.XX	±.XX	
.XXX	±.XXX	

THIRD ANGLE PROJECTION

EAR NO.

APPROVALS		DATE
DRAWN	LF	05/04/15
CHECKED	BA	05/04/15
RESP ENG		
MFG ENG		

CAD FILE:

Amphenol Cables on Demand
20 VALLEY ST. ENDICOTT, NY 13760

SFP+ MM OPTICAL MODULE

SIZE A | DWG. NO. SF-10GSFPPLCL-000 | REV. A0

SCALE | SHEET 2 OF 2