REVISIONS					
REV	ECO	DESCRIPTION	DATE	BY	APPR
01	–	CUSTOMER DRAWING	–	–	–

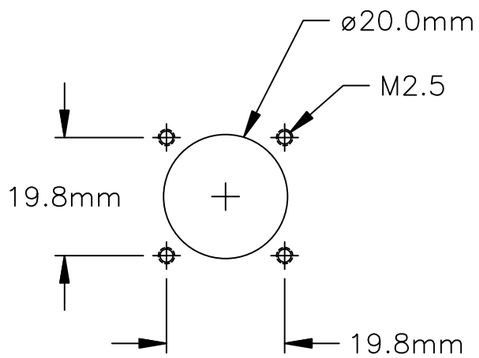

PANEL CUTOUT

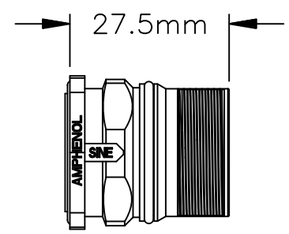

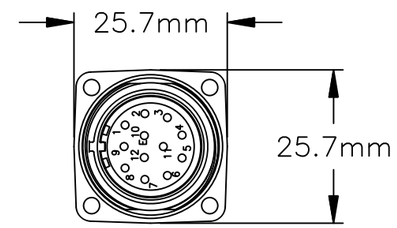

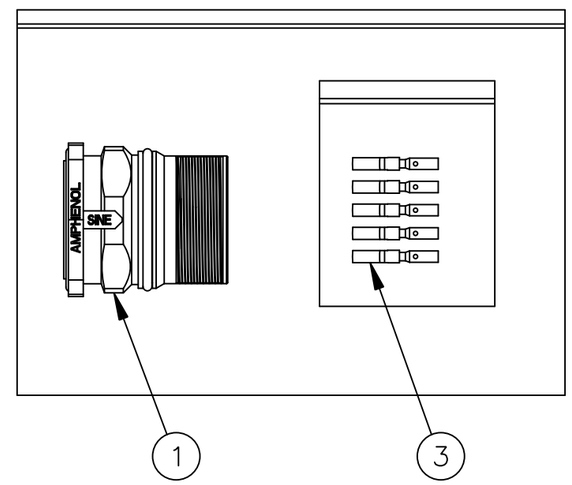

NOTES:

1) CONTACT BARREL RANGE: 18AWG TO 22AWG
2) RECOMMENDED CRIMP TOOLS:
   HAND CRIMPER: AFM8 AND SK2/2
   PNEUMATIC CRIMPER: WA22 AND SK2/2
3) EXTRACTION TOOL: 50–54931–1
4) MATERIALS:
   HOUSING BODY: ZINC DIE CAST, NICKEL PLATED
   INSULATION INSERT: PA66, UL94/V–0
   CONTACT: BRASS, GOLD PLATED
   SEALS: DUPONT VITON
5) ELECTRICAL DATA:
   a) CURRENT (MAX): 9A
   b) VOLTAGE (MAX): 125V AC/DC
   c) CONTACT RESISTANCE: <5 mOHMS
   d) TEST VOLTAGE (BETWEEN CONTACTS): 2500V
   e) DEGREE OF PROTECTION: 3 PER UL840
   f) OVERVOLTAGE CATEGORY: III PER UL840
6) TEMPERATURE RANGE: –20°C TO 130°C
7) PROTECTION: IP67 (MATED CONDITION)
8) MATING CYCLES: >50

QUANTITY	PART NUMBER	DESCRIPTION	ITEM
12	SC000044	CONTACT, SOCKET, ø1.0mm	2
1	MA1LAE1200	CONNECTOR	1

MATERIALS LIST

UNLESS OTHERWISE SPECIFIED
1) All dimensions are in metric(mm).
2) Tolerances are as follows:
1 PL DEC ±0.30
2 PL DEC ±0.15
3 PL DEC ±0.08
Fractions ±1/64
Angles ±1°
3) Note reference = X

MATERIAL SPECIFICATIONS:

PROCESS SPECIFICATIONS:

NEXT ASS'Y:

SIGNATURES		DATE
DRAWN:	MRF	10SEP13
CHECKED:		
ENGINEER:		
APPROVAL:		
CUSTOMER:		

THIS DRAWING IS SUPPLIED FOR INFORMATION ONLY. DESIGN FEATURES, SPECIFICATIONS AND PERFORMANCE DATA SHOWN HEREON ARE THE PROPERTY OF THE AMPHENOL CORPORATION. NO RIGHTS OF REPRODUCTION ARE IMPLIED. ALL DIMENSIONS ARE SUBJECT TO NORMAL MANUFACTURING VARIATIONS.

Amphenol

Sine Systems - www.amphenol-sine.com
44724 Morley Drive
Clinton Township, MI 48036

KIT, M23

SIZE	TYPE	DWG NO:	REVISION
B	C-	MA1LAE1200S-KIT	01

SCALE: NONE SHEET 1 OF 1

TITLE: KIT, M23
DWG NO:
REV: 01
SH: 1
OF: 1