REVISIONS			
REV	DESCRIPTION	DATE	APPROVED
01_1	REVISED PER ECN 92-0010	1/14/93	1/20/93

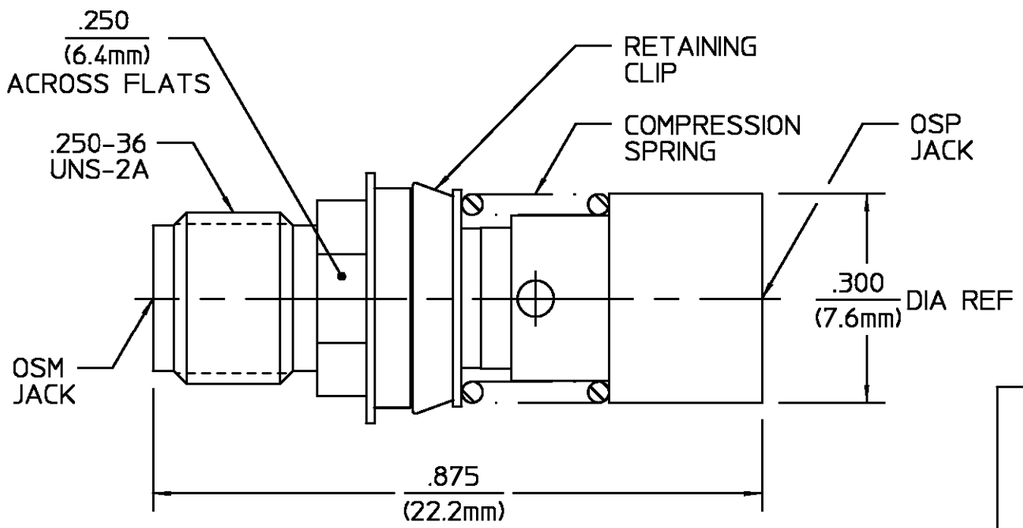

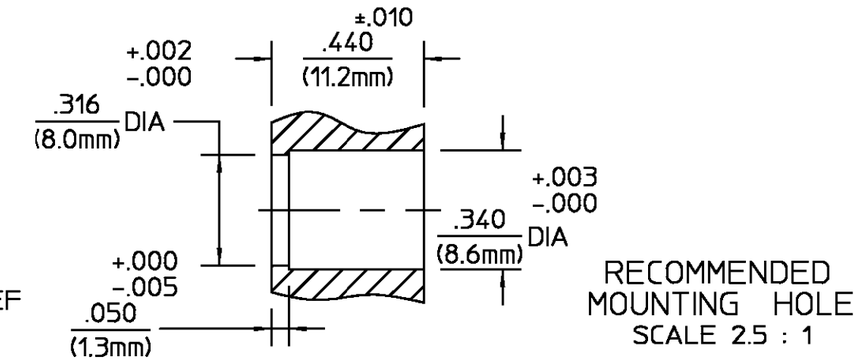

RECOMMENDED
MOUNTING HOLE
SCALE 2.5 : 1

ELECTRICAL	
Nominal Impedance (Ohms)	50
Frequency Range (GHz) DC to	18
Volt Rating (VRMS MAX)	
@ Sea Level	335
VSWR	1.05 + .005 F(GHz)
Insertion Loss (dB MAX)	$.06\sqrt{f(GHz)}$
RF Leakage (dB MIN)	-60 @ 2-3 GHz
Corona, 70,000 Ft (VRMS MIN)	250
Dielectric Withstanding Voltage	
(VRMS MIN) @ Sea Level	1000
Contact Resistance (Milliohms MAX)	
Center Contact	4.0
Outer Contact	2.0
RF High Potential @ Sea Level	
(VRMS MIN @ 5 MHz)	670
I.R.(Megohms MIN)	5000

MECHANICAL	
Interface Dimensions	
OSM MIL-STD-348A, Fig 310.2	
OSP SEE CATALOG	
Mating Characteristics (OSP & OSM):	
Insertion (MAX Lbs)	3
Withdrawal (MIN Oz)	1
Force to Engage:	
OSM (In-Lbs MAX)	2.0
OSP (Lbs MAX)	3.0
Force to Disengage:	
OSM (In-Lbs MAX)	2.0
OSP (Lbs MAX)	1.5
Contact Retention	
Axial (Lbs)	6.0
Radial (In-Oz)	N/A
Weight (Grams)	TBD

ENVIRONMENTAL
Temperature Rating -65°C to +165°C
Vibration MIL-STD-202, Method 204, Condition D.
Shock MIL-STD-202, Method 213, Condition I.
Thermal Shock MIL-STD-202, Method 107, Condition C,
Moisture Resistance MIL-STD-202, Method 106
Corrosion - MIL-STD-202, Method 101, Condition B, 5% salt spray

COMPONENT	MATERIAL	FINISH
HOUSING BUSHING	STAINLESS STEEL PER ASTM-A484 AND ASTM-A582, TYPE 303	PASSIVATE PER ASTM-A380
SPRING	STAINLESS STEEL	PASSIVATED
DIELECTRIC	TFE FLUOROCARBON PER ASTM-D-1457	N/A
CENTER CONTACT CONTACT SLEEVE	BERYLLIUM COPPER PER ASTM B 196, ALLOY C17300, CONDITION H	GOLD PLATE PER MIL-G-45204 OVER COPPER PLATE PER MIL-C-14550
CONTACT RING	BERYLLIUM COPPER PER ASTM B 194, ALLOY C17200, CONDITION H	GOLD PLATE PER MIL-G-45204 OVER COPPER PLATE PER MIL-C-14550
RETAINING RING	BERYLLIUM COPPER PER ASTM B 194, ALLOY C17200, CONDITION H	GOLD PLATE PER MIL-C-45204

UNLESS OTHERWISE SPECIFIED DIMENSIONS ARE IN INCHES
TOLERANCE ON
FRAC. ± 1/64 DEC. ±.005 ANGLES ± 1°

DRAWN BY B ST HILLAIRE DATE 5/19/88
CHECKED BY S ALLERDICE 6/2/88
APP'D BY B CLEVELAND 6/23/88

AMP

AMP Incorporated
140 Fourth Avenue
Waltham, MA 02451-7599

These drawings and specifications are the property of Omni Spectra Incorporated and shall not be reproduced or copied or used in whole or in part as the basis for the manufacture or sale of item(s) without written permission.

USE ASS'Y PROCEDURE

NO. A.P. N/A

TITLE OSP FLOATING PANEL FEEDTHRU REAR MOUNT JACK TO OSM JACK ADAPTER

SIZE	CODE IDENT NO.		REV
B	26805	4583-2240-02	01_1
SCALE 5:1			SHEET 1 OF 1

CUSTOMER DRAWING

AMP PART # 1059724-1
SHEET 1 OF 1 REV A