THIS DRAWING IS UNPUBLISHED. RELEASED FOR PUBLICATION 20
© COPYRIGHT 20 BY - ALL RIGHTS RESERVED.

REVISIONS

P	LTR	DESCRIPTION	DATE	DWN	APVD
	C1	REVISED PER ECR-17-017609	04DEC2017	JB	DZ

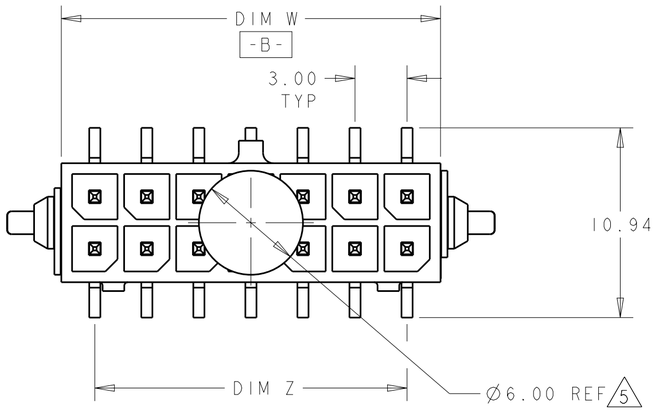

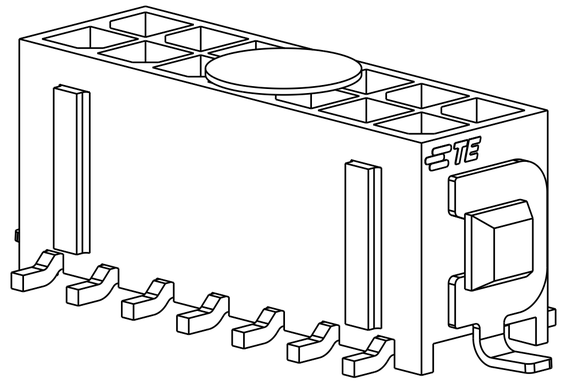

SCALE 6:1

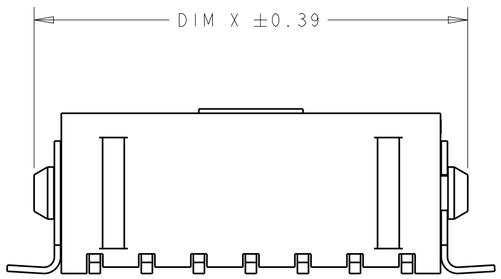

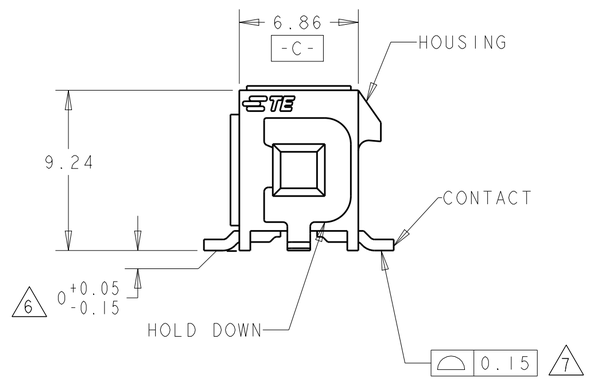

1. MATERIAL:
   CONTACTS - BRASS.
   HOUSING - UL 94V-0 RATED HIGH TEMP NYLON, COLOR; BLACK.
   HOLD DOWNS - PHOSPHOR BRONZE.

2. FINISH:
   CONTACTS - 2.54µm MINIMUM MATTE TIN OVER 1.27µm MINIMUM NICKEL.
   HOLD DOWNS - 2.54µm MATTE TIN.

3. SPECIAL PACKAGING FOR IEC 286-3 REQUIREMENT. PARTS ORIENTED TAPE 180° DIFFERENT IN TAPE THAN STANDARD PART NUMBER 794636.

4. RECOMMENDED PC BOARD THICKNESS OF 1.57.

5. KAPTON VACUUM PICK UP BUTTON.

6. DIMENSION APPLIES TO SOLDERTAIL SURFACES AND STANDOFF SURFACES.

7. ALL SOLDERTAILS AND HOLD DOWNS.

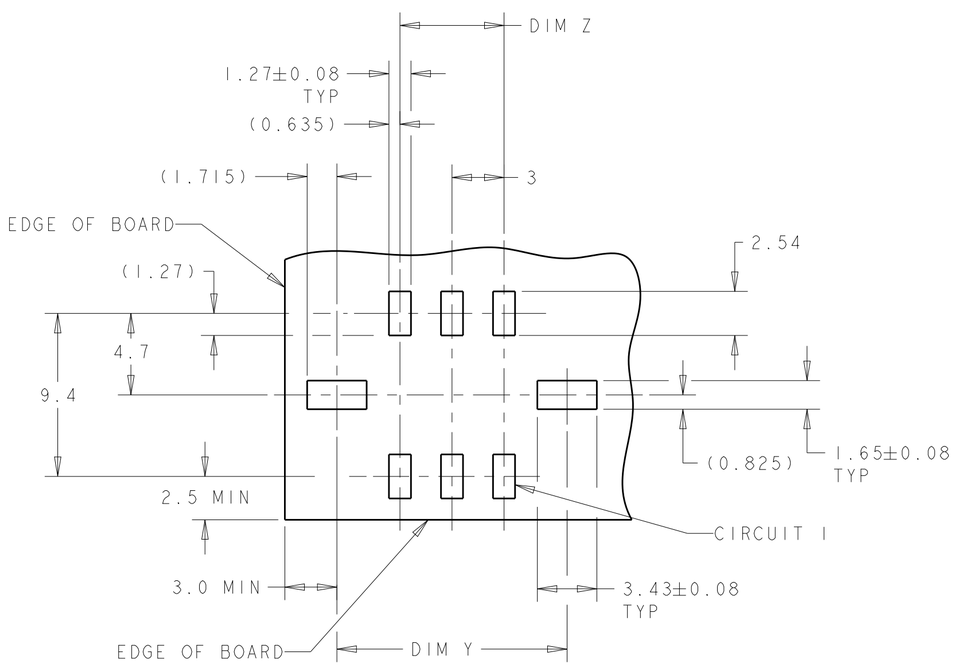

RECOMMENDED PCB LAYOUT 4
(COMPONENT SIDE)

2	30.86	34.27	27.00	34.00	20	2-1586842-0
	24.86	28.27	21.00	28.00	16	1-1586842-6
	18.86	22.27	15.00	22.00	12	1-1586842-2
	12.86	16.27	9.00	16.00	8	1586842-8
	9.86	13.27	6.00	13.00	6	1586842-6
	6.86	10.27	3.00	10.00	4	1586842-4
	3.86	7.27	-	7.00	2	1586842-2
FINISH	DIM W	DIM Y	DIM Z	DIM X	NO. OF POSN.	ASSEMBLY

THIS DRAWING IS A CONTROLLED DOCUMENT.

DIMENSIONS: mm

TOLERANCES UNLESS OTHERWISE SPECIFIED:
0 PLC ±-
1 PLC ±
2 PLC ±0.13
3 PLC ±
4 PLC ±
ANGLES ±-

MATERIAL 1

FINISH SEE TABLE

DWN K. WHITAKER 05NOV2007
CHK C. JONES 05NOV2007
APVD C. JONES 05NOV2007
PRODUCT SPEC
APPLICATION SPEC
WEIGHT

TE Connectivity

NAME HEADER ASSY, VERTICAL, SURFACE MOUNT, SURF MNT HOLDDOWN, TIN, DUAL ROW, SPCL PKGING, MICRO MATE-N-LOK (TM)

SIZE A2 | CAGE CODE - | DRAWING NO C-1586842 | RESTRICTED TO -

CUSTOMER DRAWING | SCALE 4:1 | SHEET 1 OF 1 | REV C1

1586842