THIS DRAWING IS UNPUBLISHED. RELEASED FOR PUBLICATION –,– .
© COPYRIGHT – By – ALL RIGHTS RESERVED.

LOC	DIST
J	—

REVISIONS
変更

P	LTR	DESCRIPTION	DATE	DWN	APVD
	C2	REVISED PER ECO-11-005140	28MAR11	RK	HMR

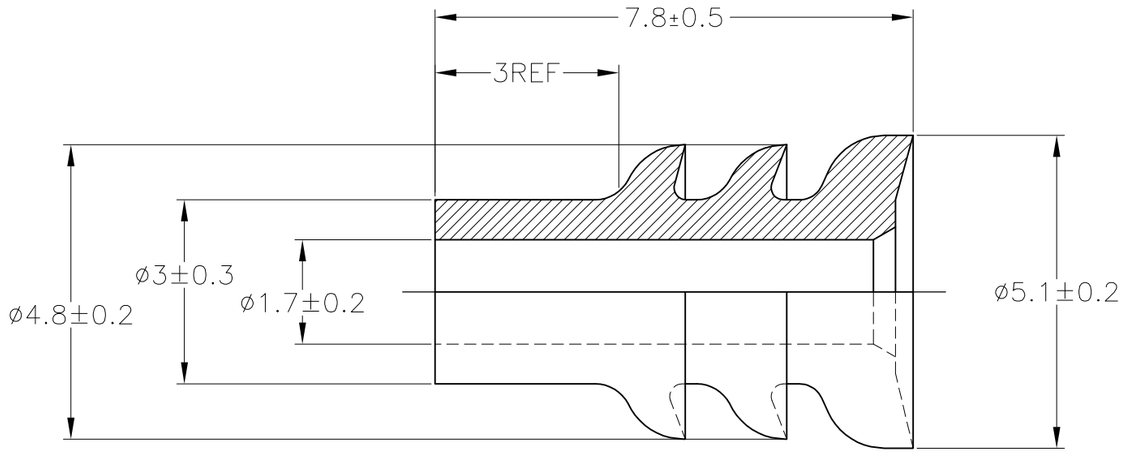

1. OIL COATED TYPE

1. オイル塗布タイプ

MATERIAL	COLOR	PART NUMBER
NBR	灰色 (GRAY)	9-172888-2
Si	べんがら色 (BROWN)	1-172888-3
NBR	緑色 (GREEN)	172888-3
NBR 1	灰色 (GRAY)	172888-2
SEE DRAWING 172888-1		172888-1

WIRE RANGE	INSULATION DIA.
0.5～1.25mm² (AWG#20-#16)	2～2.6mmø

THIS DRAWING IS A CONTROLLED DOCUMENT.

DIMENSIONS: 単位：粍 mm

TOLERANCES UNLESS OTHERWISE SPECIFIED: 一般公差

0 PLC	± –
1 PLC	± –
2 PLC	± –
3 PLC	± –
4 PLC	± –
ANGLES	± –

MATERIAL 材料: SEE TABLE

FINISH 仕上: –

DWN	T.SHINOHARA	11MAY06
CHK	K.BETSUI	11MAY06
APVD	K.BETSUI	11MAY06

PRODUCT SPEC 製品規格: —

APPLICATION SPEC 取付適用規格: —

WEIGHT: —

TE Connectivity

NAME 名称: 070 TYPE RUBBER PLUG

SIZE	CAGE CODE	DRAWING NO 番号	RESTRICTED TO
A3	00779	C-172888	—

CUSTOMER DRAWING

SCALE 尺度	SHEET	REV
10:1	1 OF 1	C2